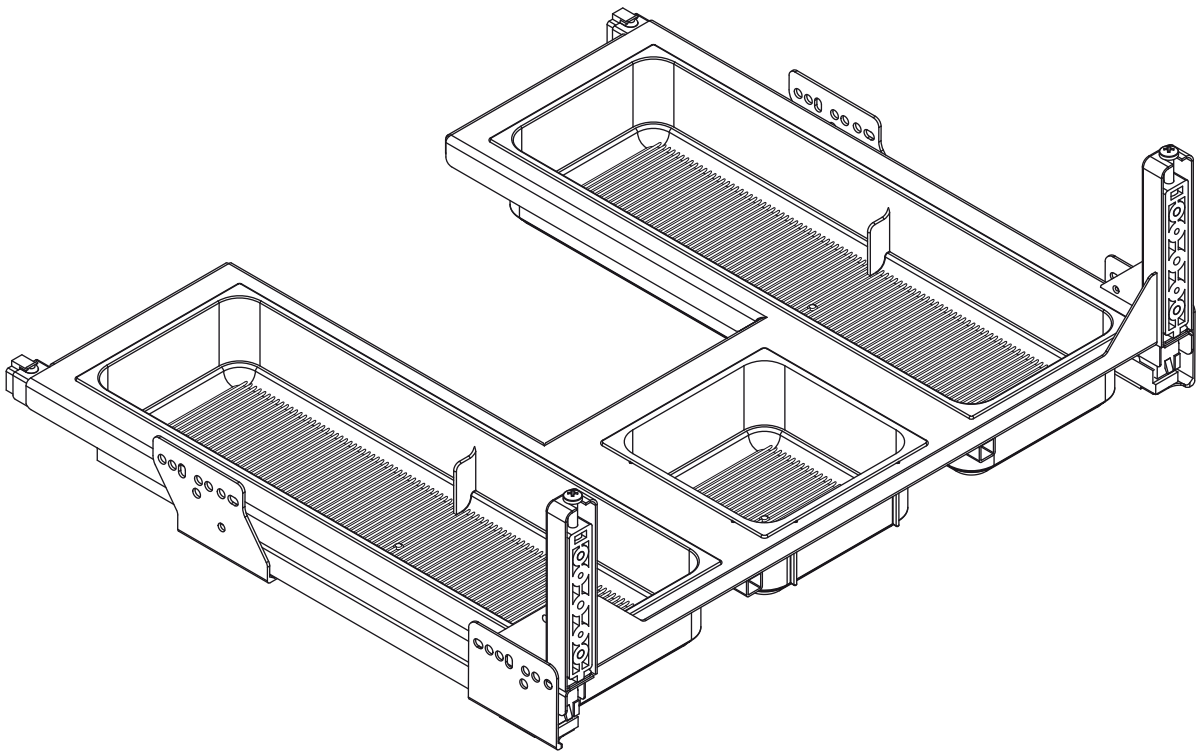

x1

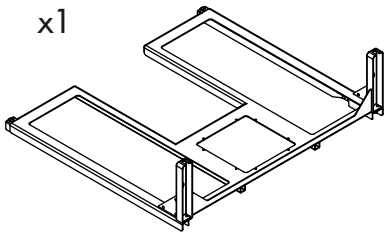

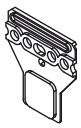

x4



x2

GRASS NOVA PRO

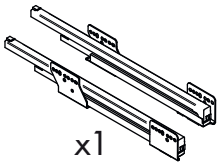

x1

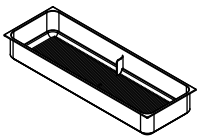

x2

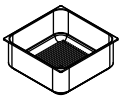

x1/2/3

ø4x16mm / ø6x10,5 mm



x4

ø4x16mm

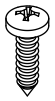

x4

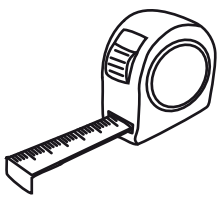

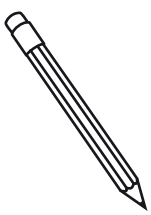

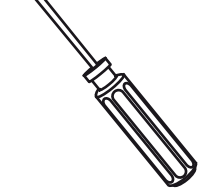

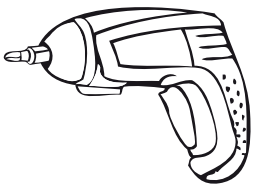

AENOR ER Empresa Registrada ER-0919/2000

CERTIFIED IQNet QUALITY SYSTEM ISO 9001

MENAGE CONFORT

www.menage-confort.com

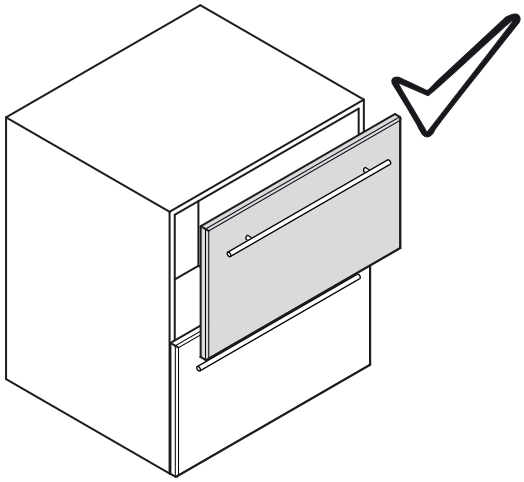

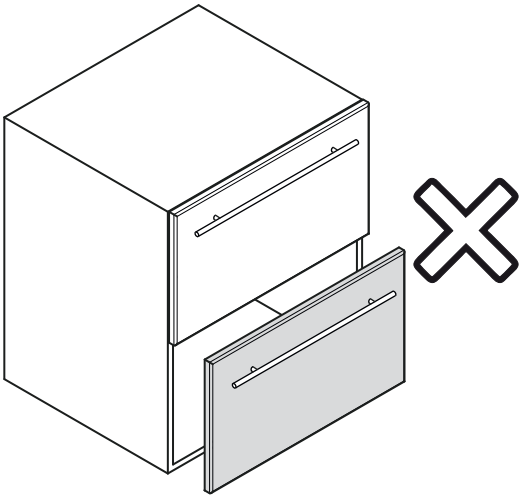

1

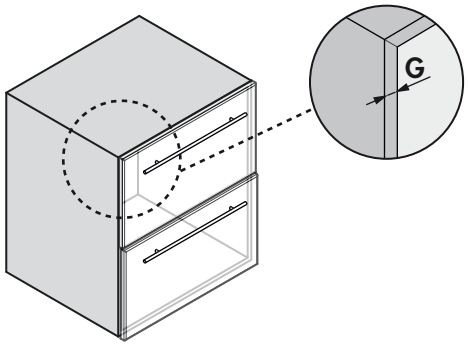

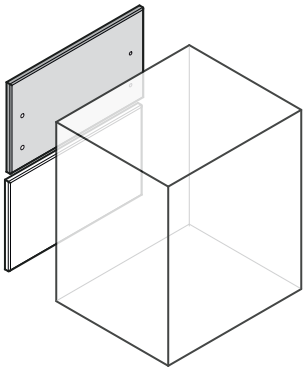

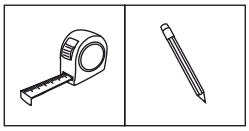

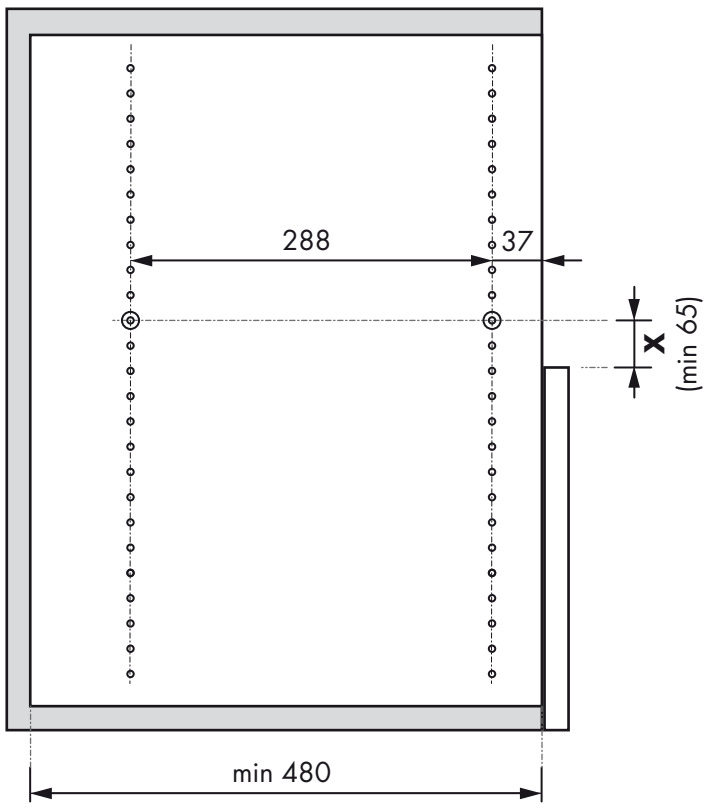

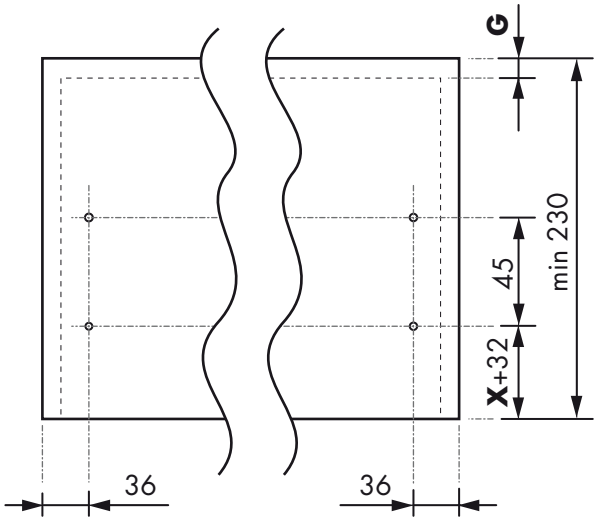

Unidades en milímetros | Units in millimeters | Unités en millimètres

2.1

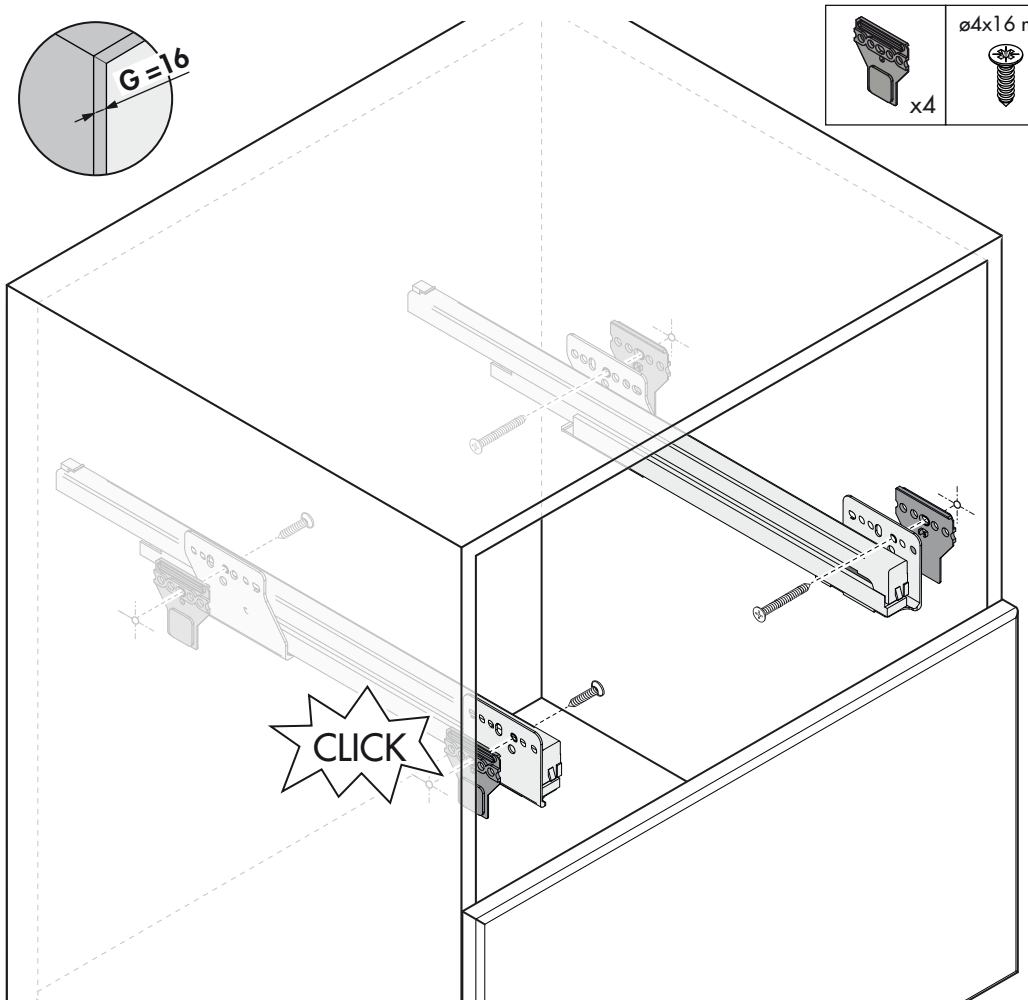

2.2

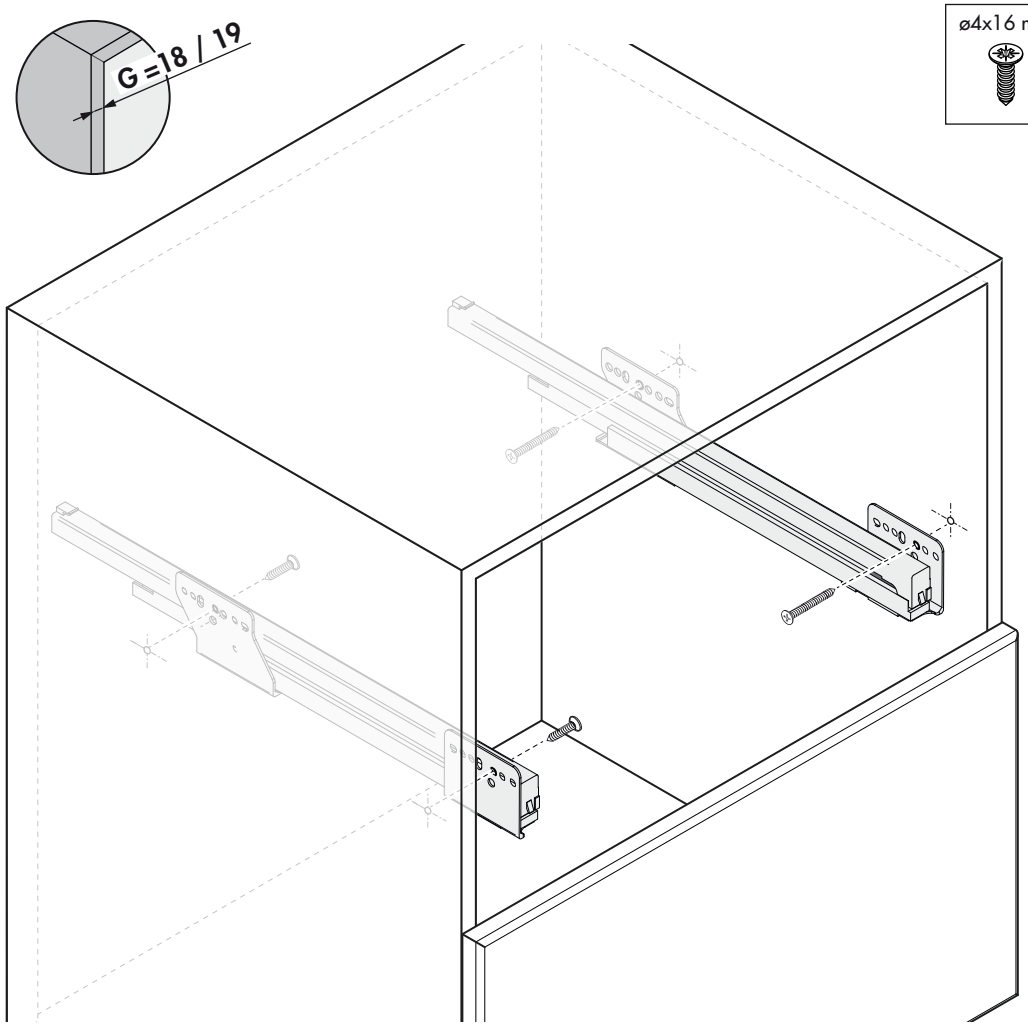

3

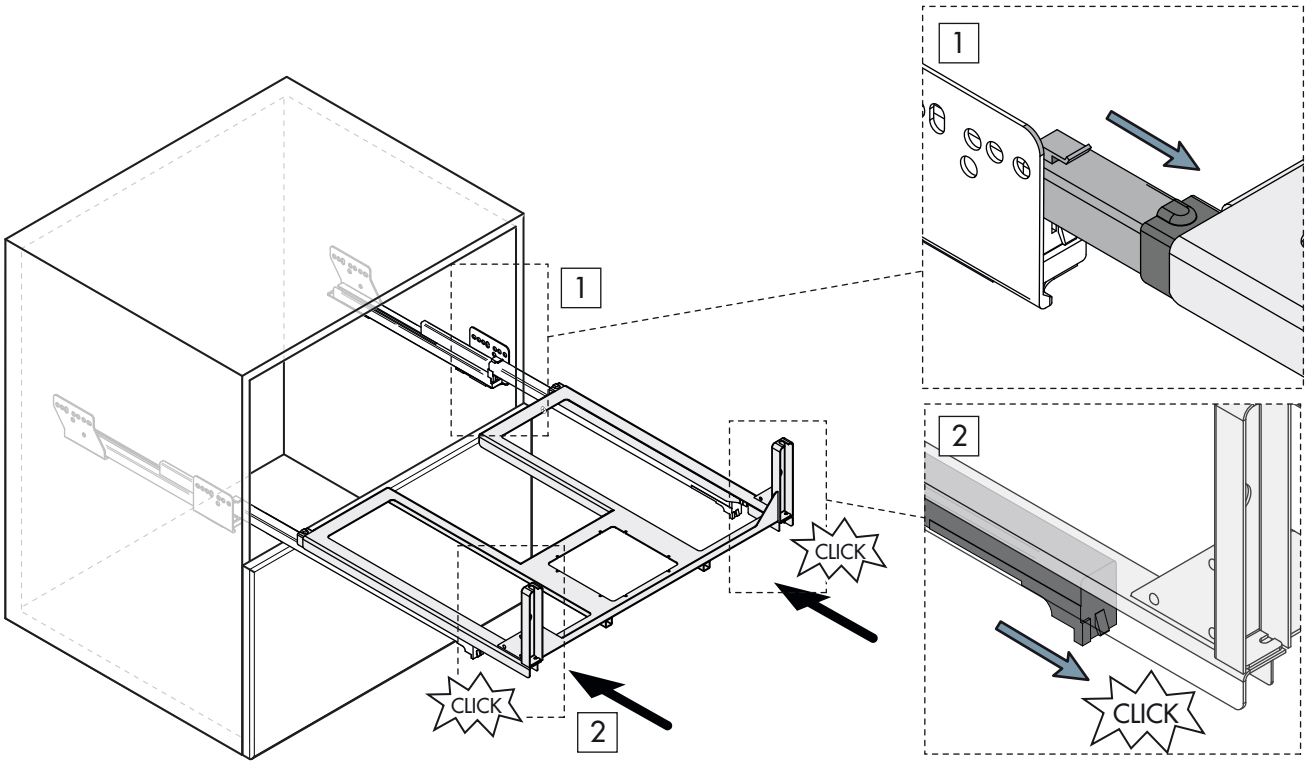

4

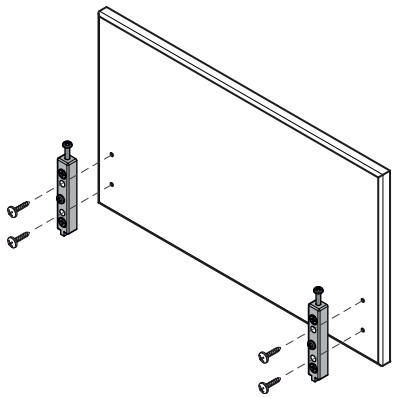

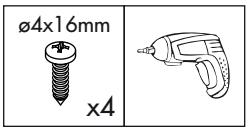

5

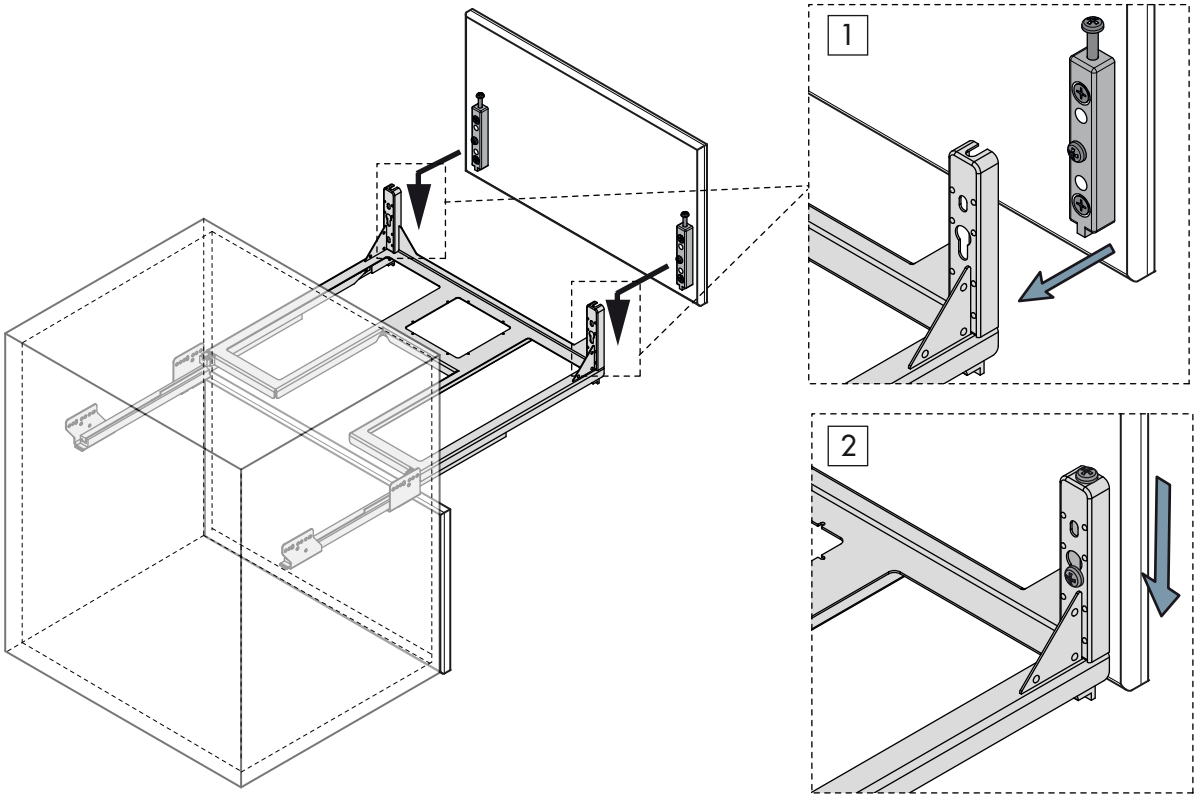

6

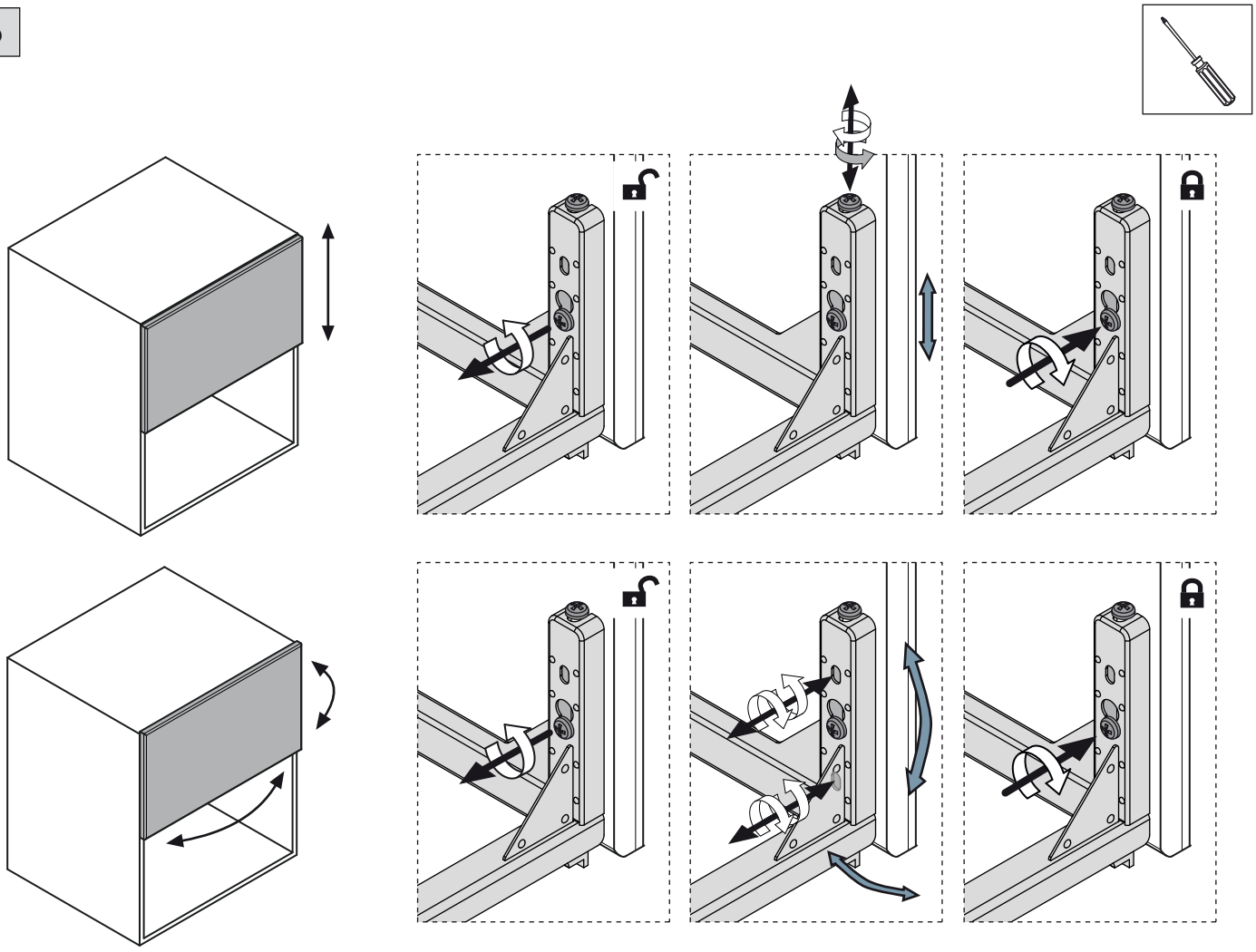

7

