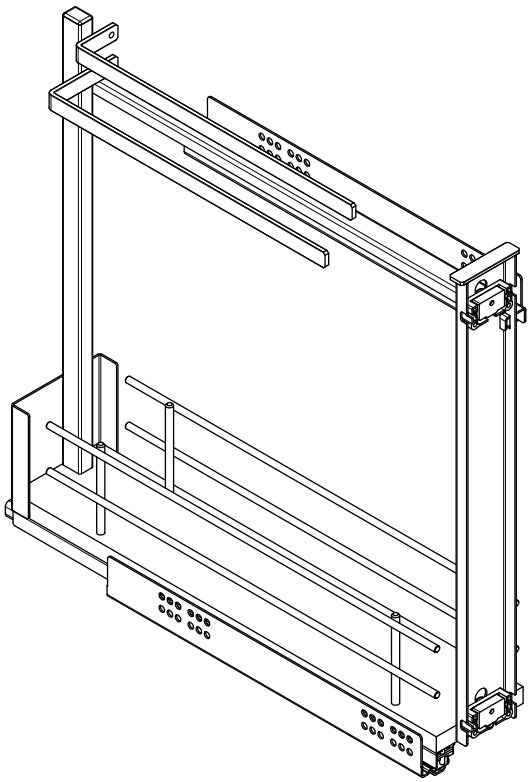

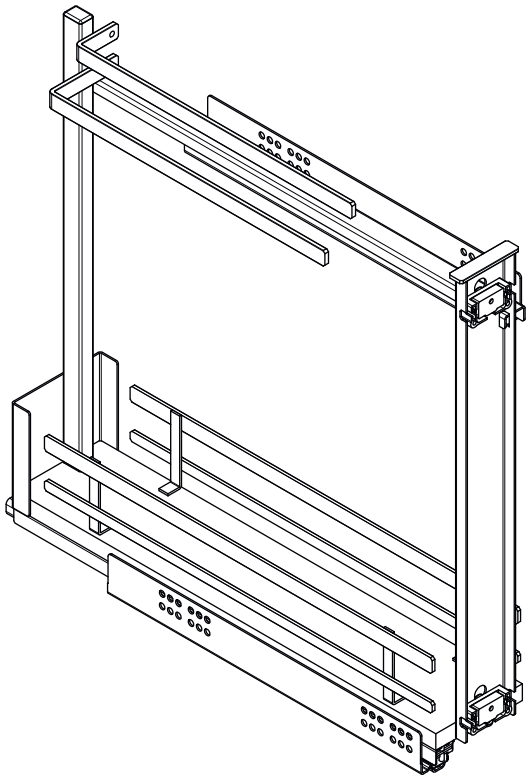

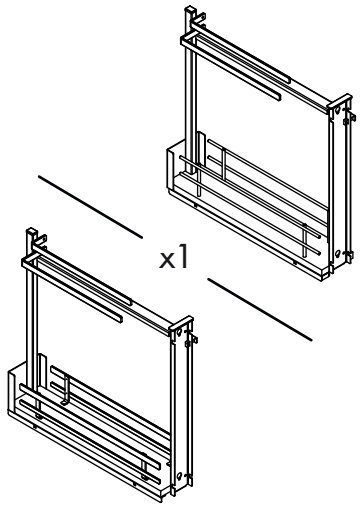

x1

M6x6mm



x4

x2

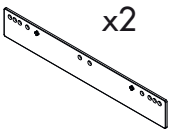

HETTICH
QUADRO V6

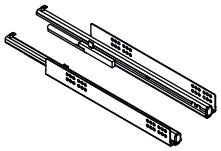

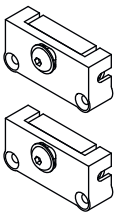

x1

ø3.5x25mm



x4

ø4x16mm

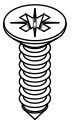

x4







3



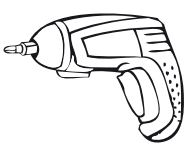

AENOR
ER
Empresa Registrada
ER-0919/2000

CERTIFIED
IQNet
QUALITY SYSTEM
ISO 9001

MENAGE CONFORT

www.menage-confort.com

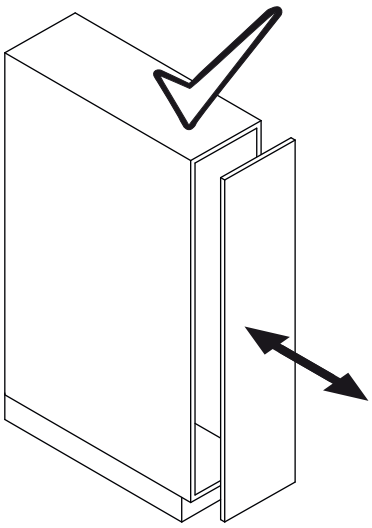

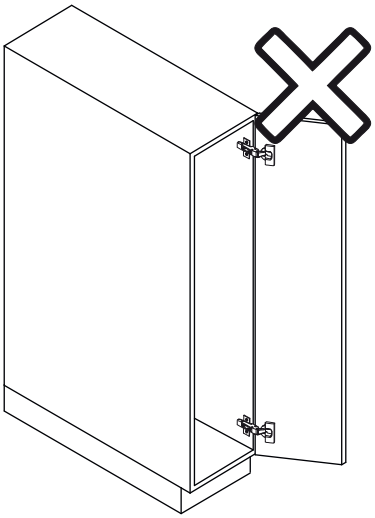

1

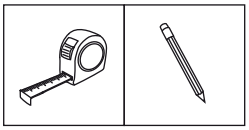

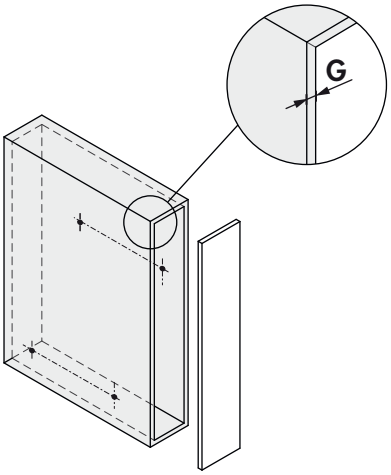

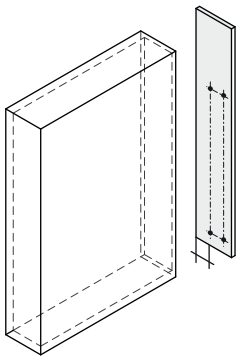

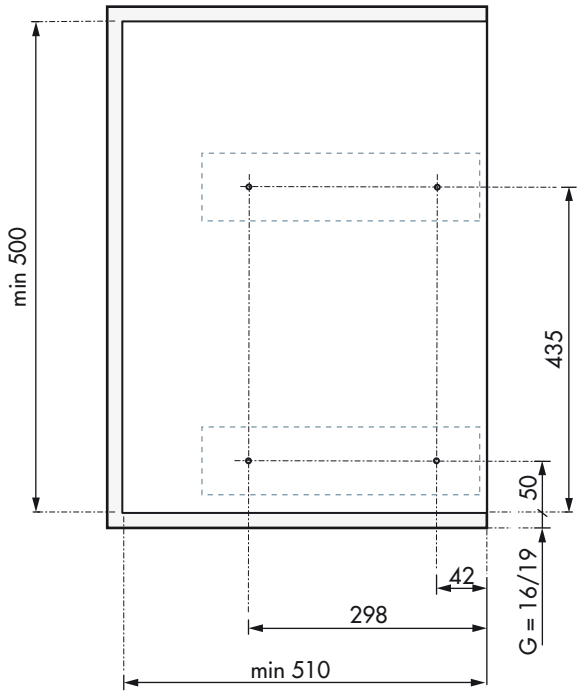

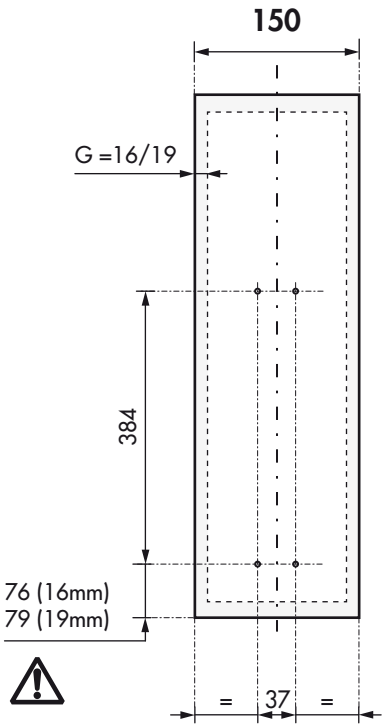

Unidades en milímetros | Units in millimeters | Unités en millimètres

2

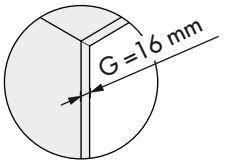

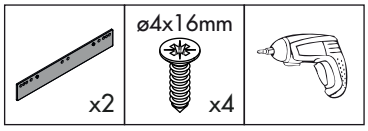

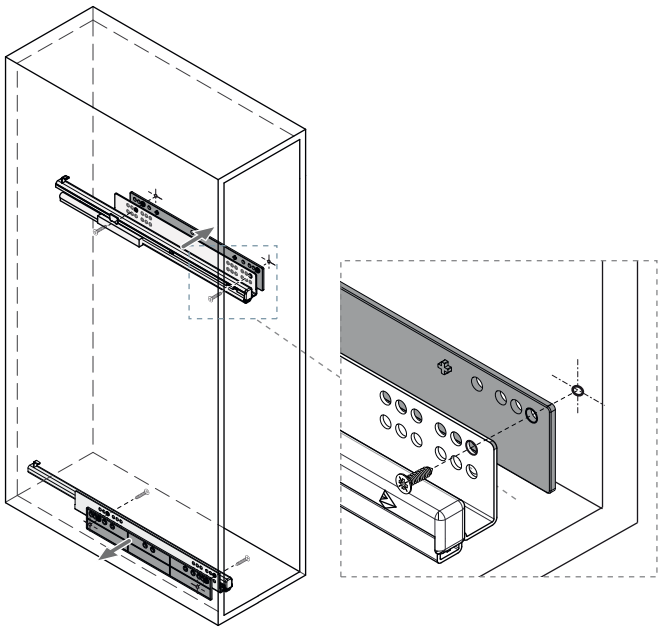

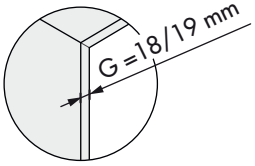

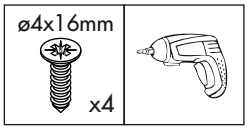

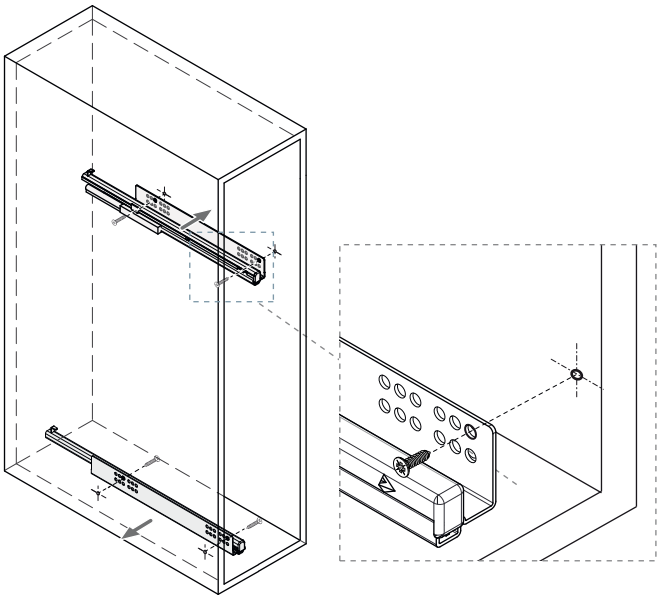

3

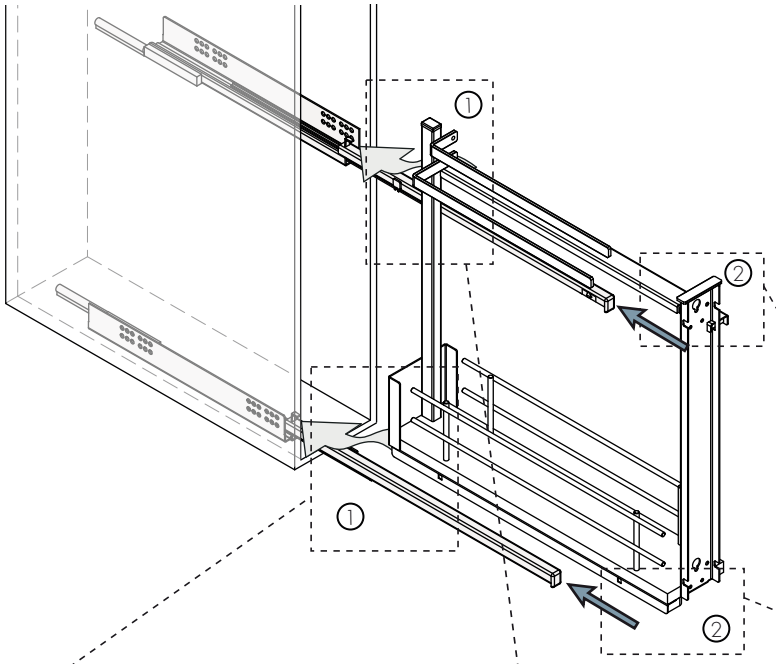

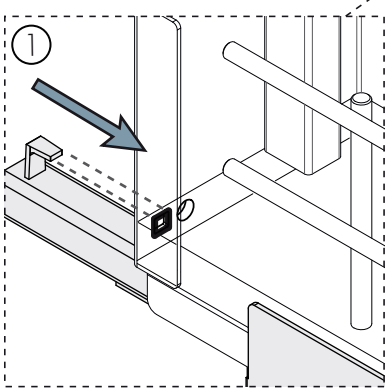

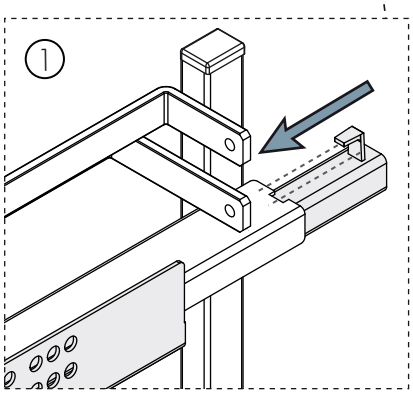

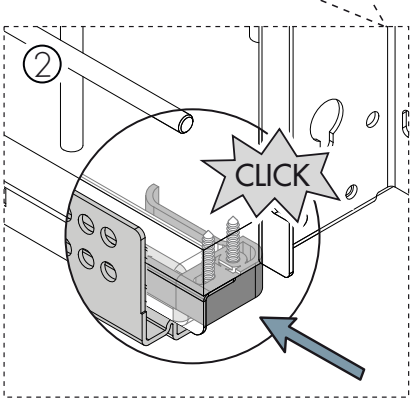

4

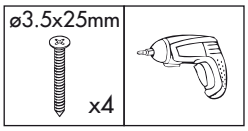

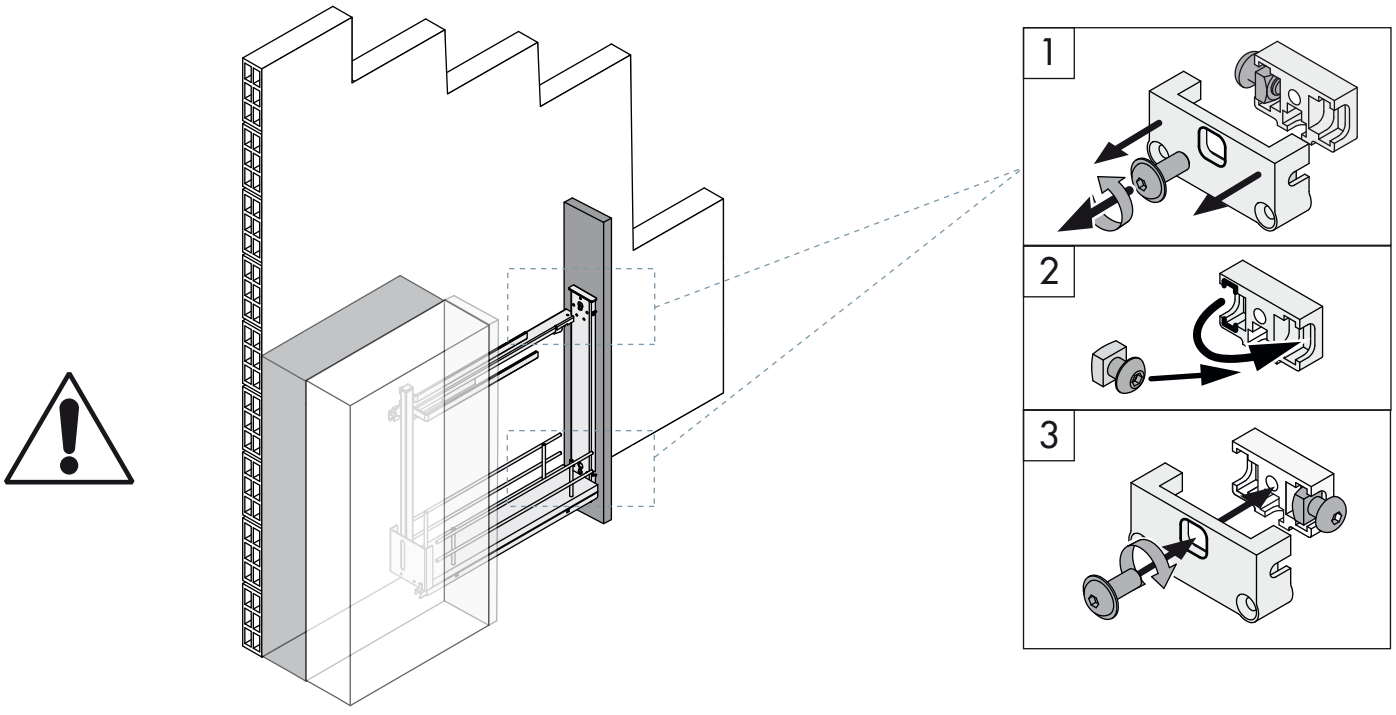

5

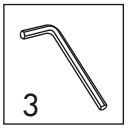

6



6.1

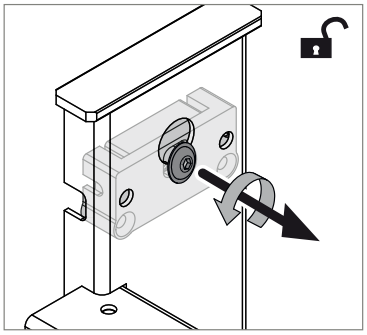

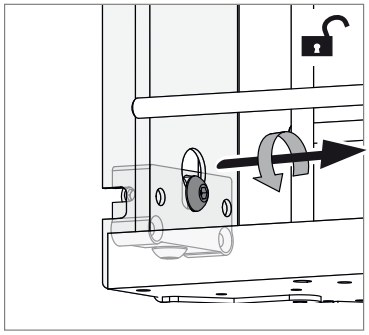

6.2

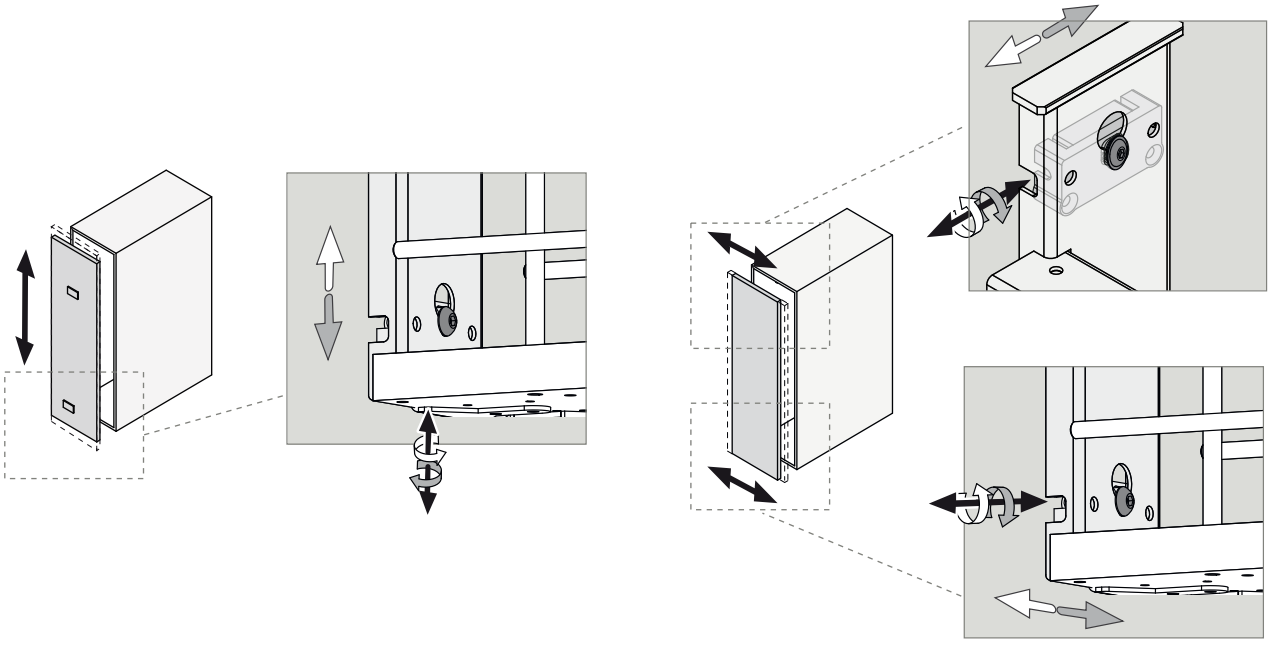

6.3

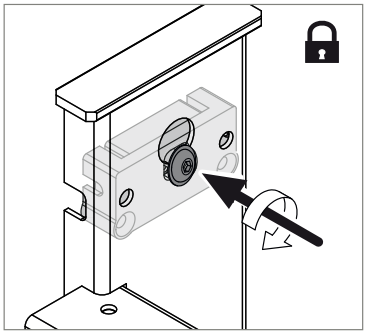

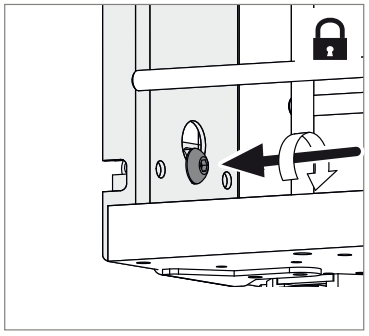

7

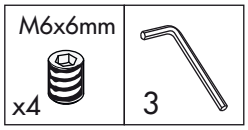

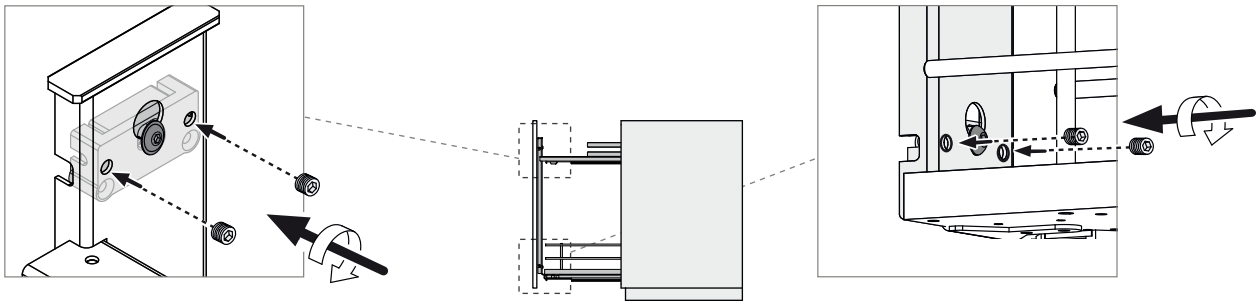

7.1

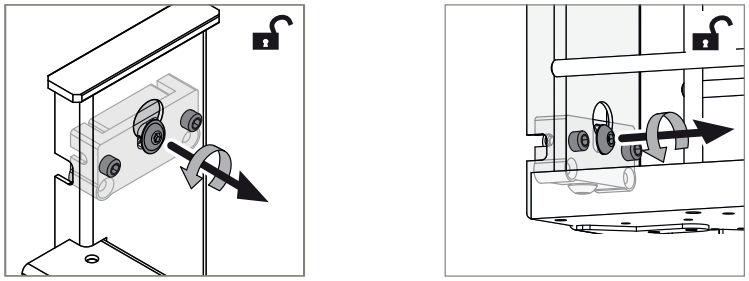

7.2

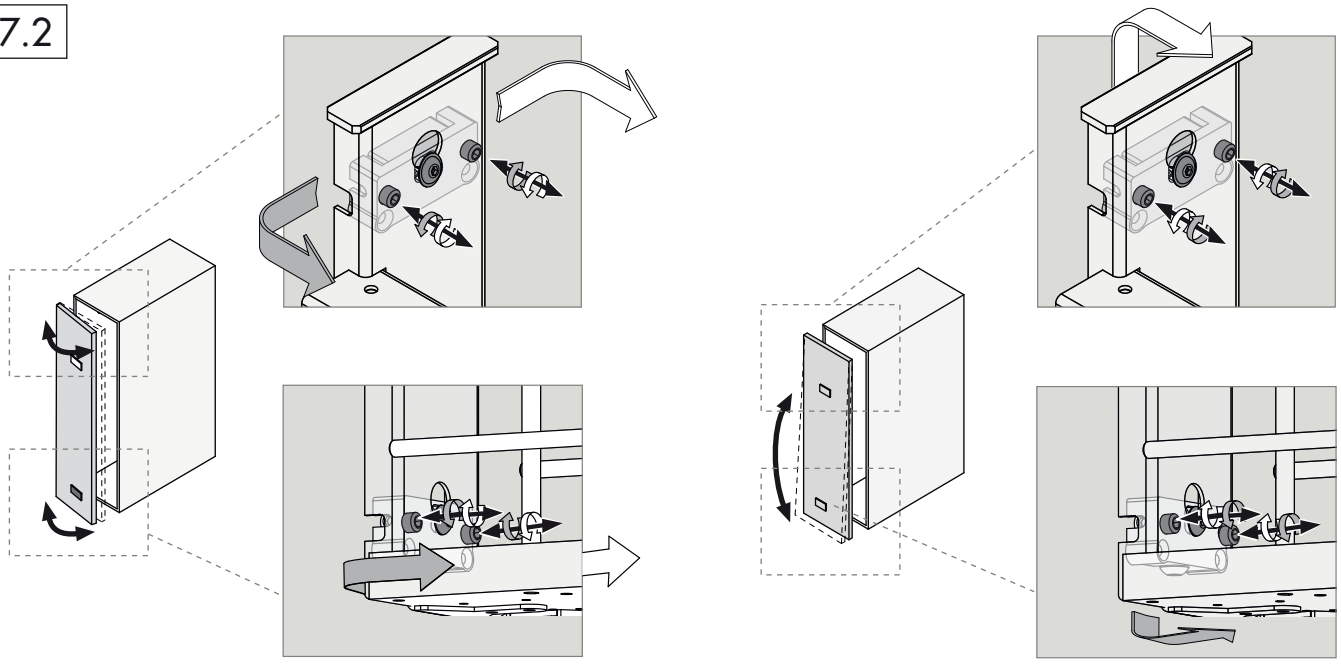

7.3

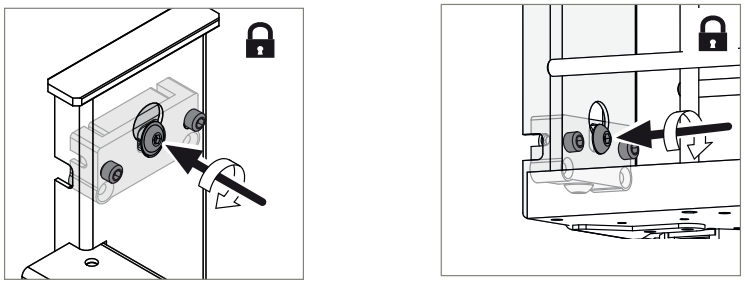

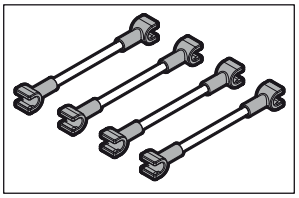

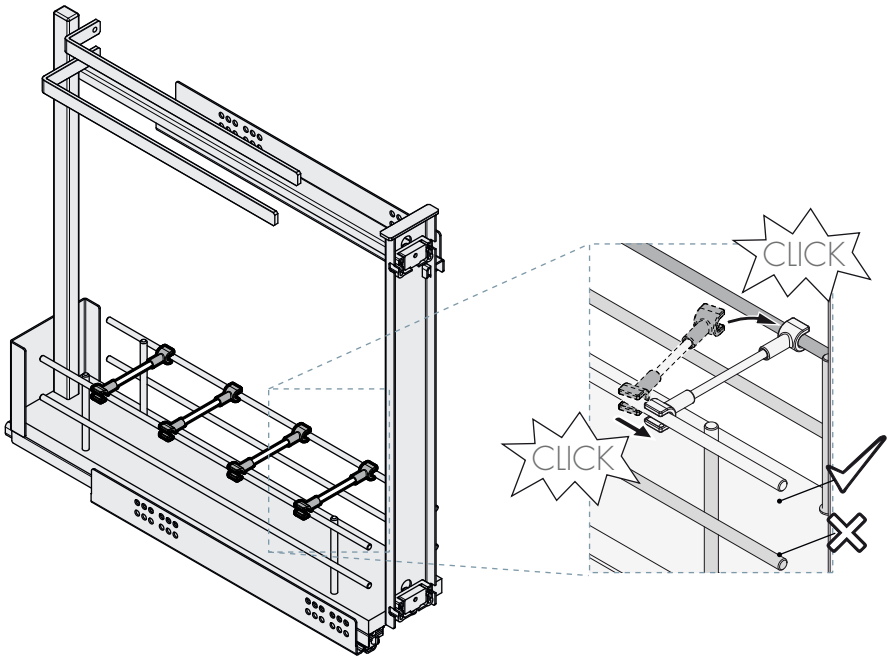
CLICK
CLICK

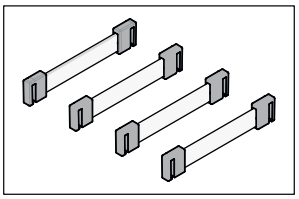

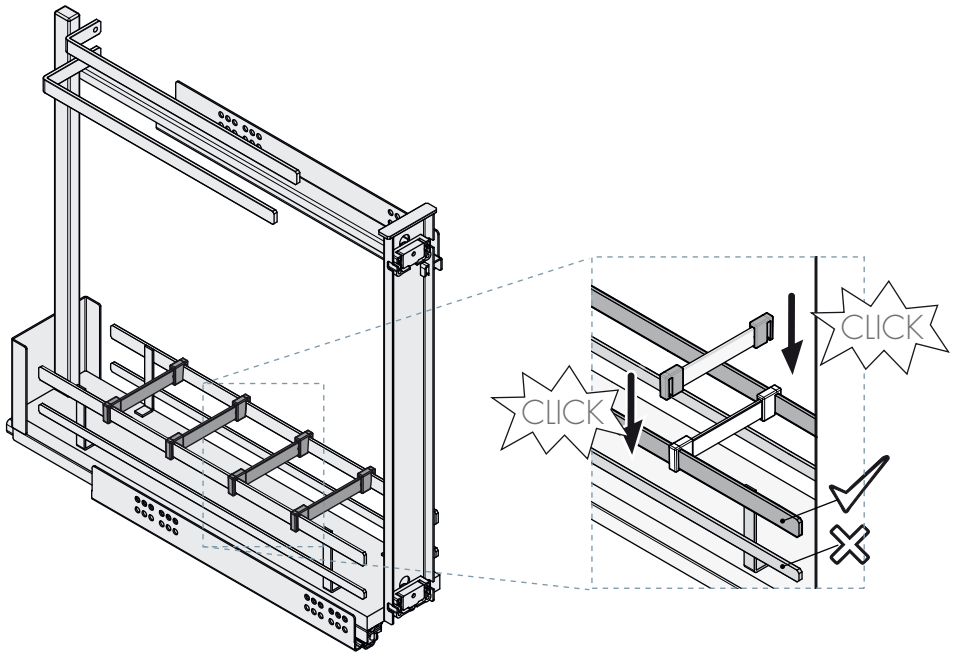
CLICK
CLICK