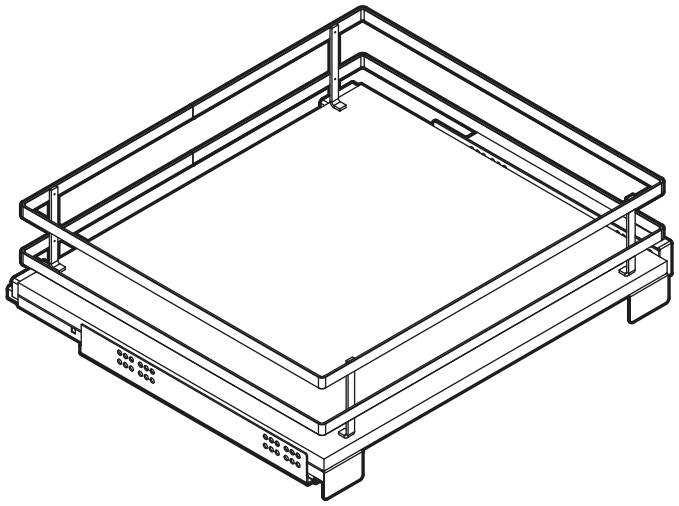

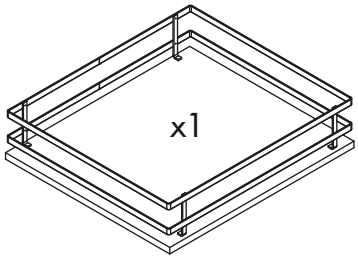

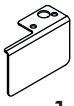
x1


x1


ø4x16mm
x4

HETTICH QUADRO V6

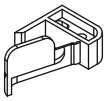
x1

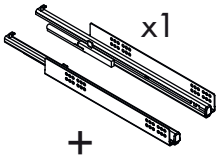
x1

+

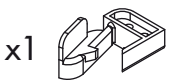
x1

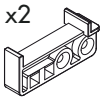
x2

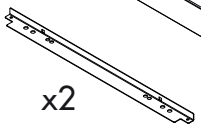
x2

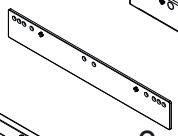
x2

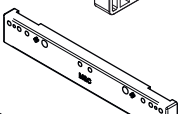
x1

ø4x16mm

x4

ø4x25mm

x4

ø4x20mm

x4

BLUM TANDEM BLUMOTION

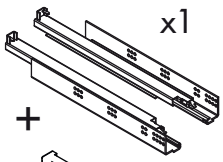
x1

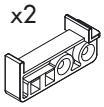
x2

+

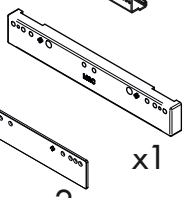
x1

x2

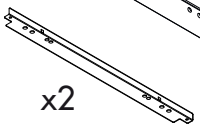
x2

ø4x16mm

x4

ø4x25mm

x4

GRASS NOVA PRO

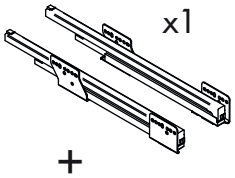
x1

+

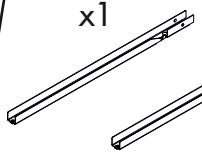
x1

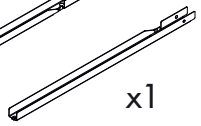
x1

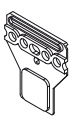
x4

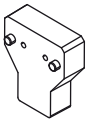
x2

ø4x16mm

x4

ø4x16mm

x2

ø6x10,5 mm


ø4x32mm

x2

ø6x30 mm








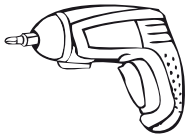

AENOR ER Empresa Registrada ER-0919/2000
CERTIFIED IQNet QUALITY SYSTEM ISO 9001

MENAGE CONFORT

www.menage-confort.com

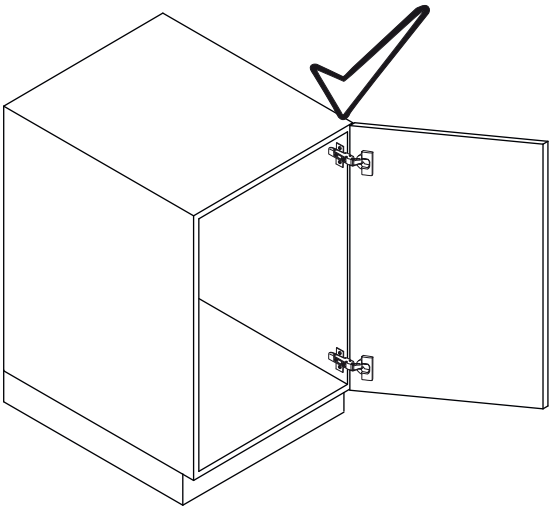

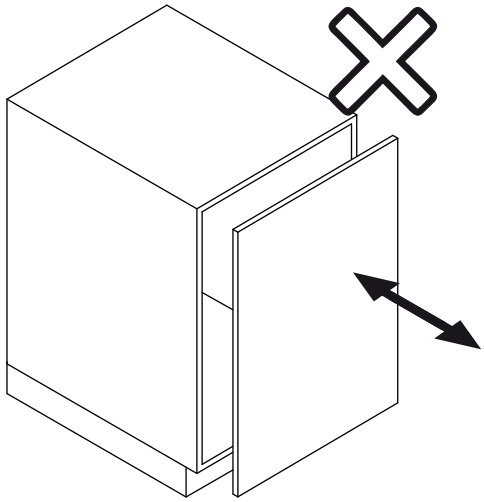

1

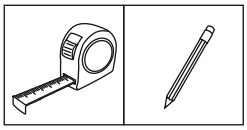

HETTICH
QUADRO V6

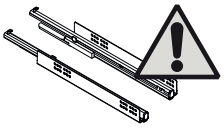

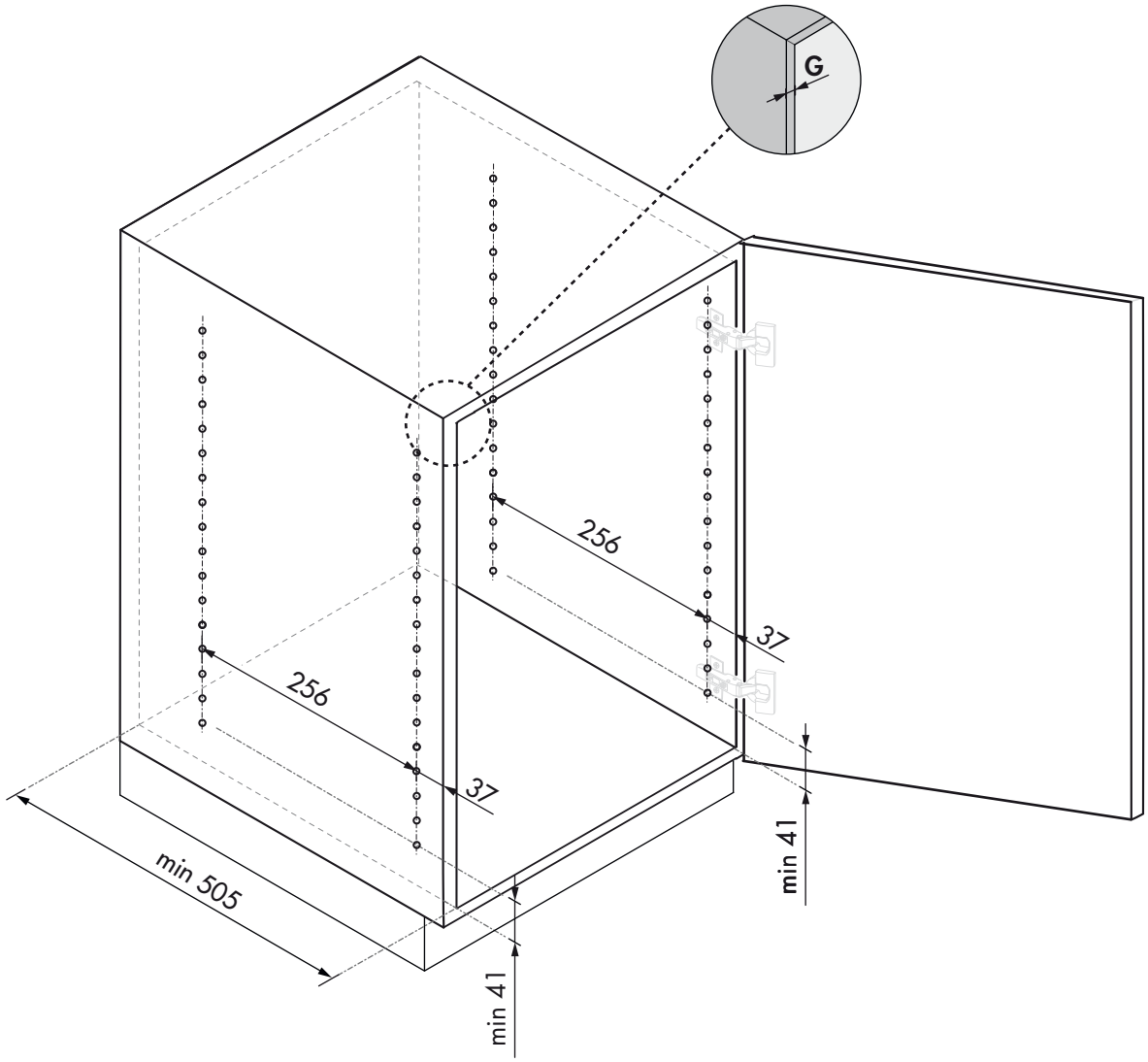

Unidades en milímetros | Units in millimeters | Unités en millimètres

2

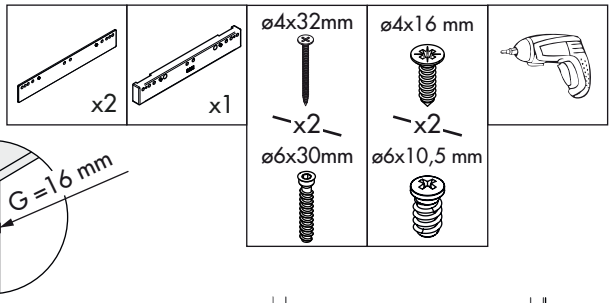
x2
x1
ø4x32mm
x2
ø6x30mm
ø4x16 mm
x2
ø6x10,5 mm

G =16 mm

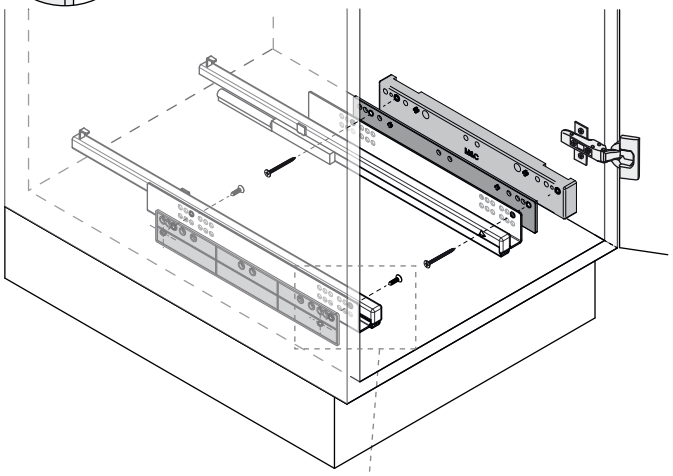

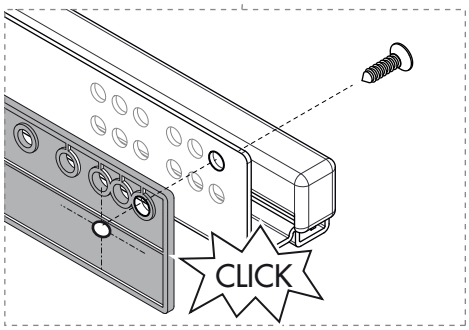
CLICK

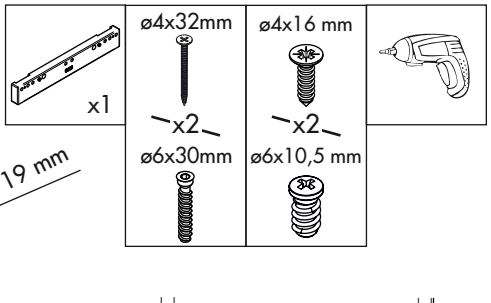
x1
ø4x32mm
x2
ø6x30mm
ø4x16 mm
x2
ø6x10,5 mm

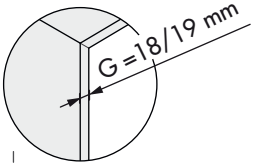
G =18/19 mm

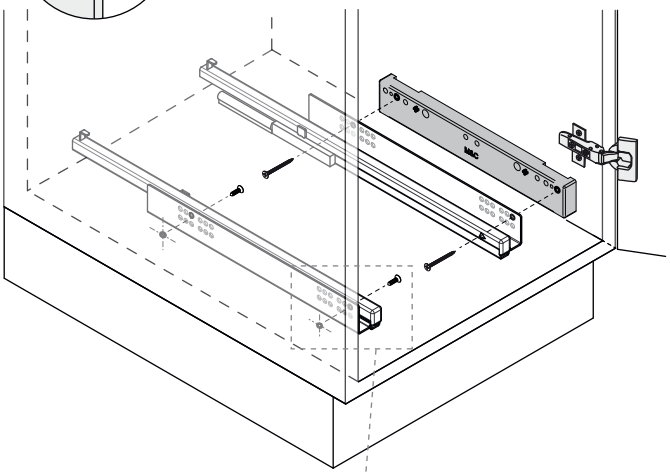

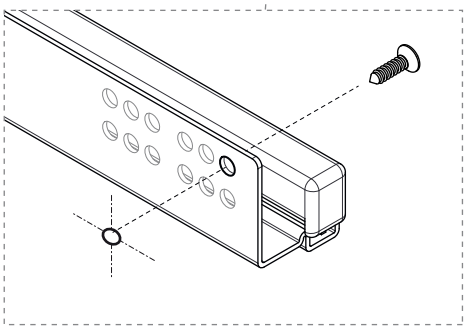

3

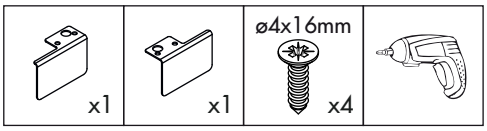
x1
x1
ø4x16mm
x4

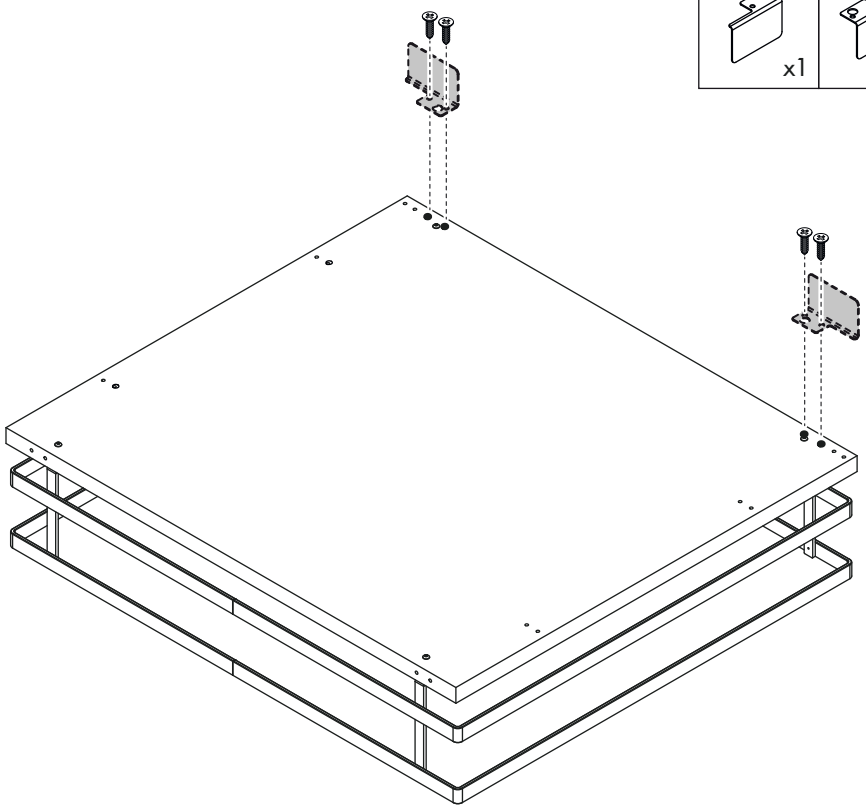

4

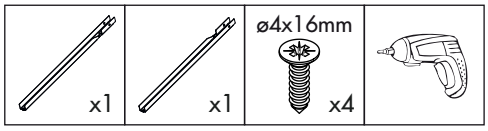

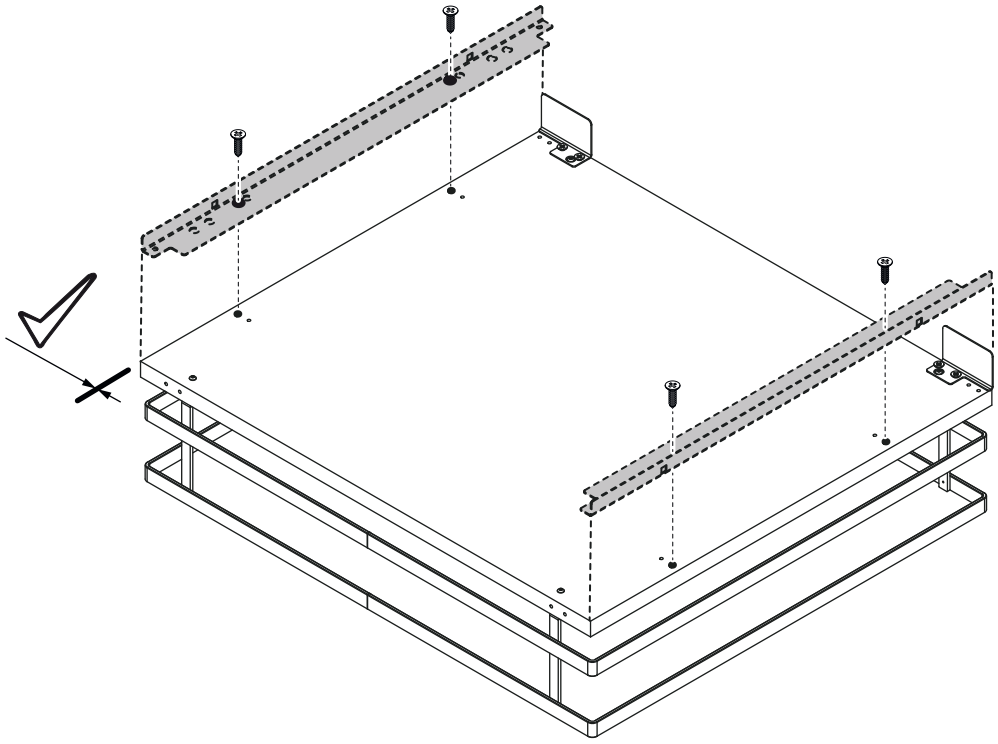

5

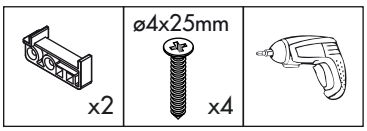

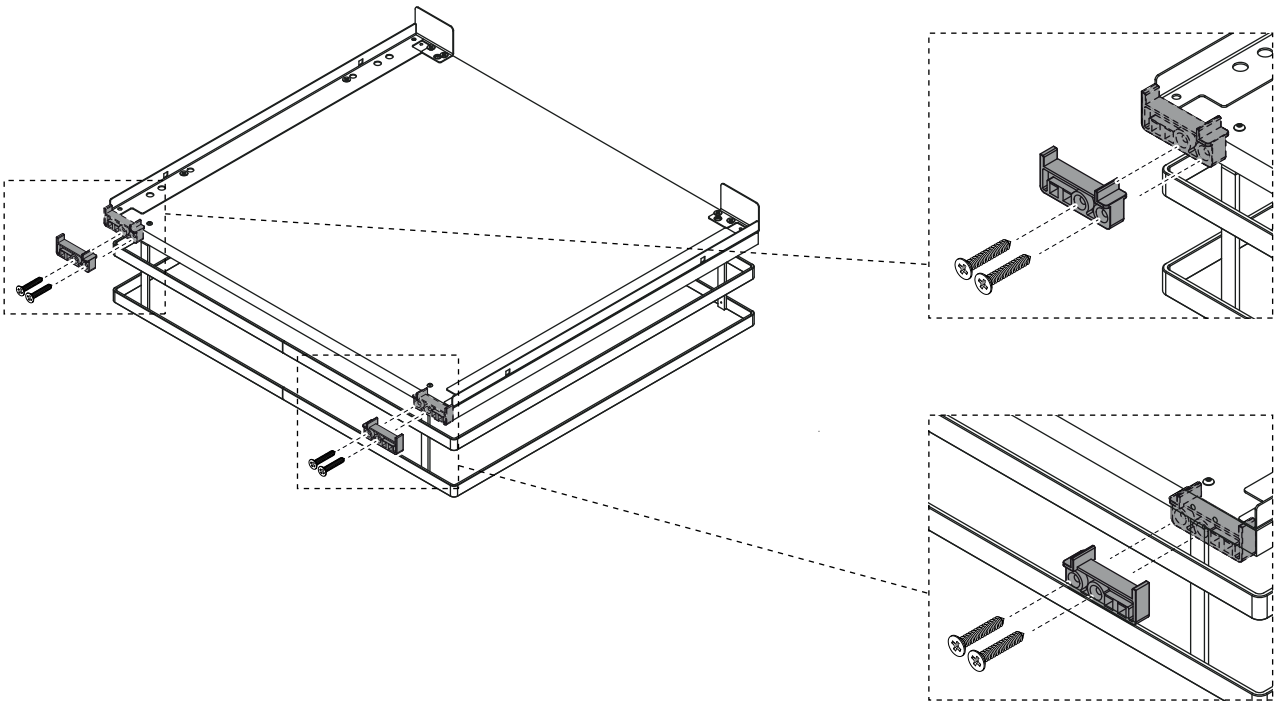

6

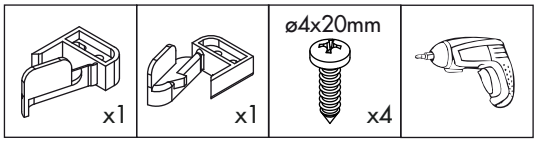

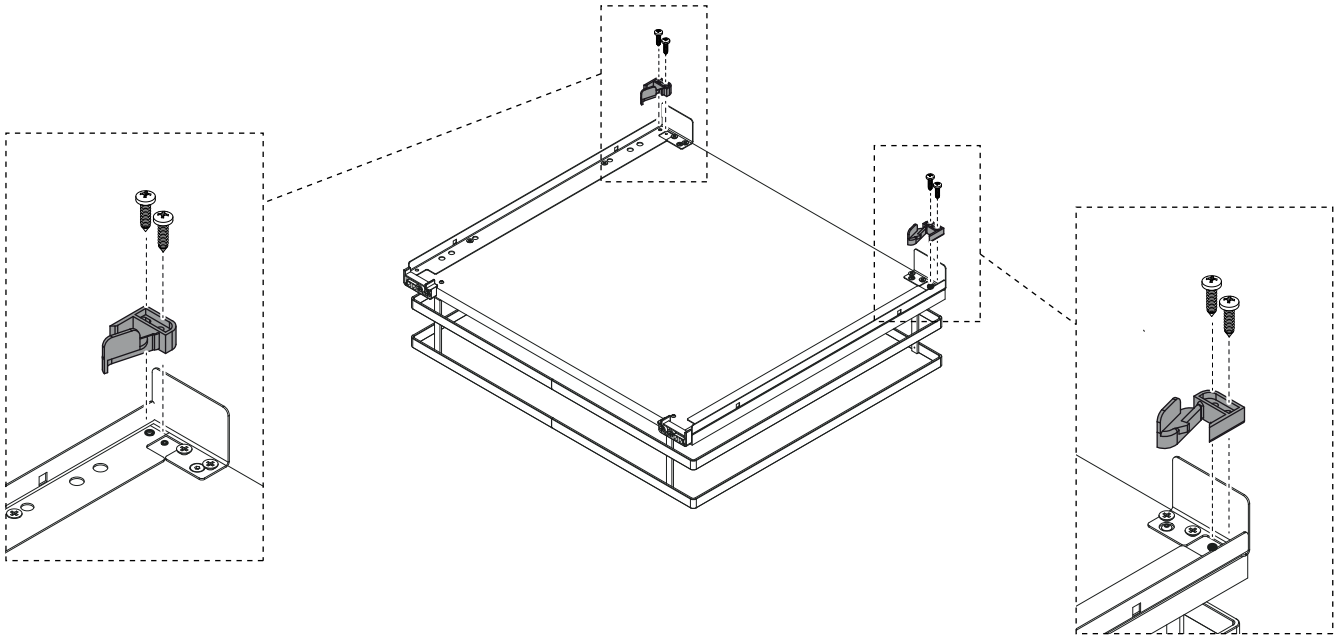

7

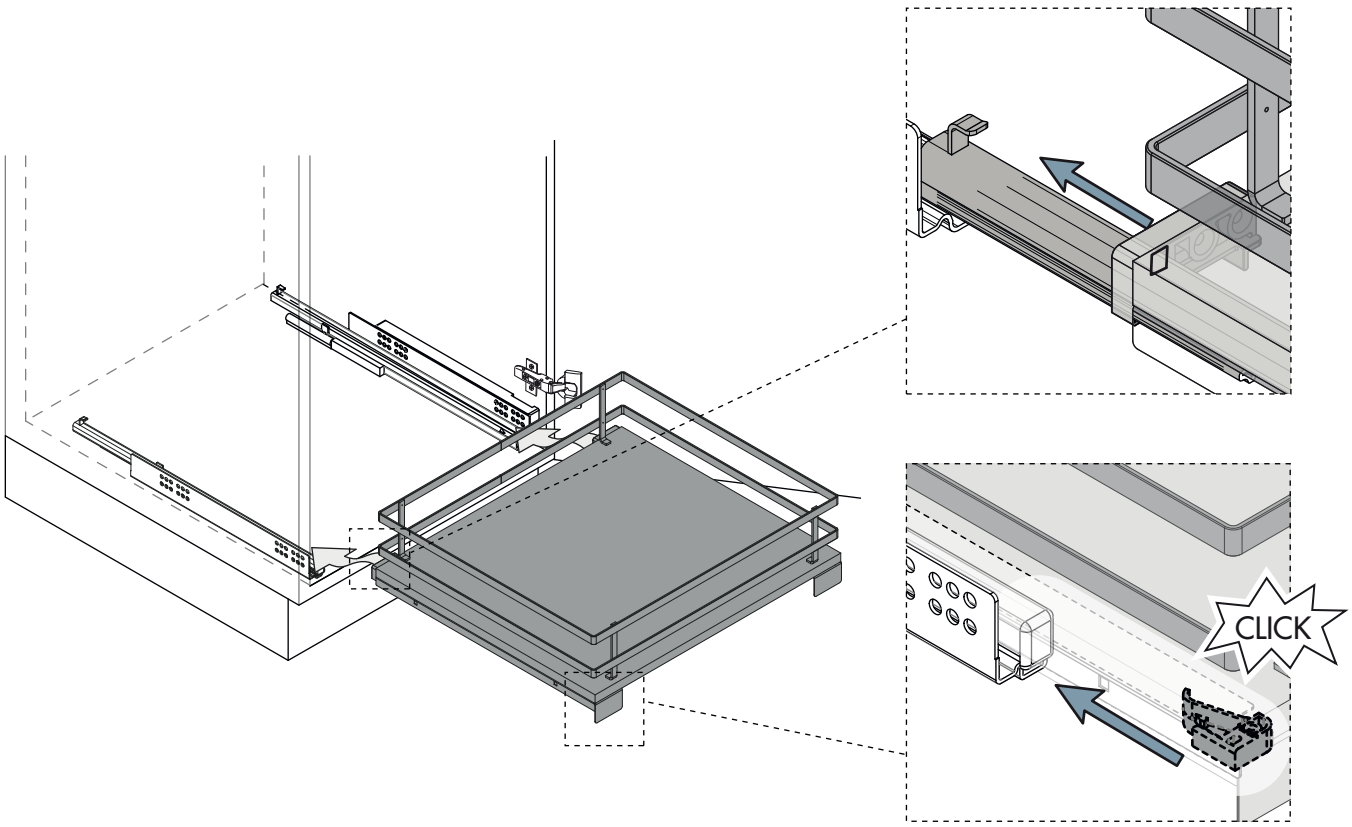

1

BLUM TANDEM
BLUMOTION

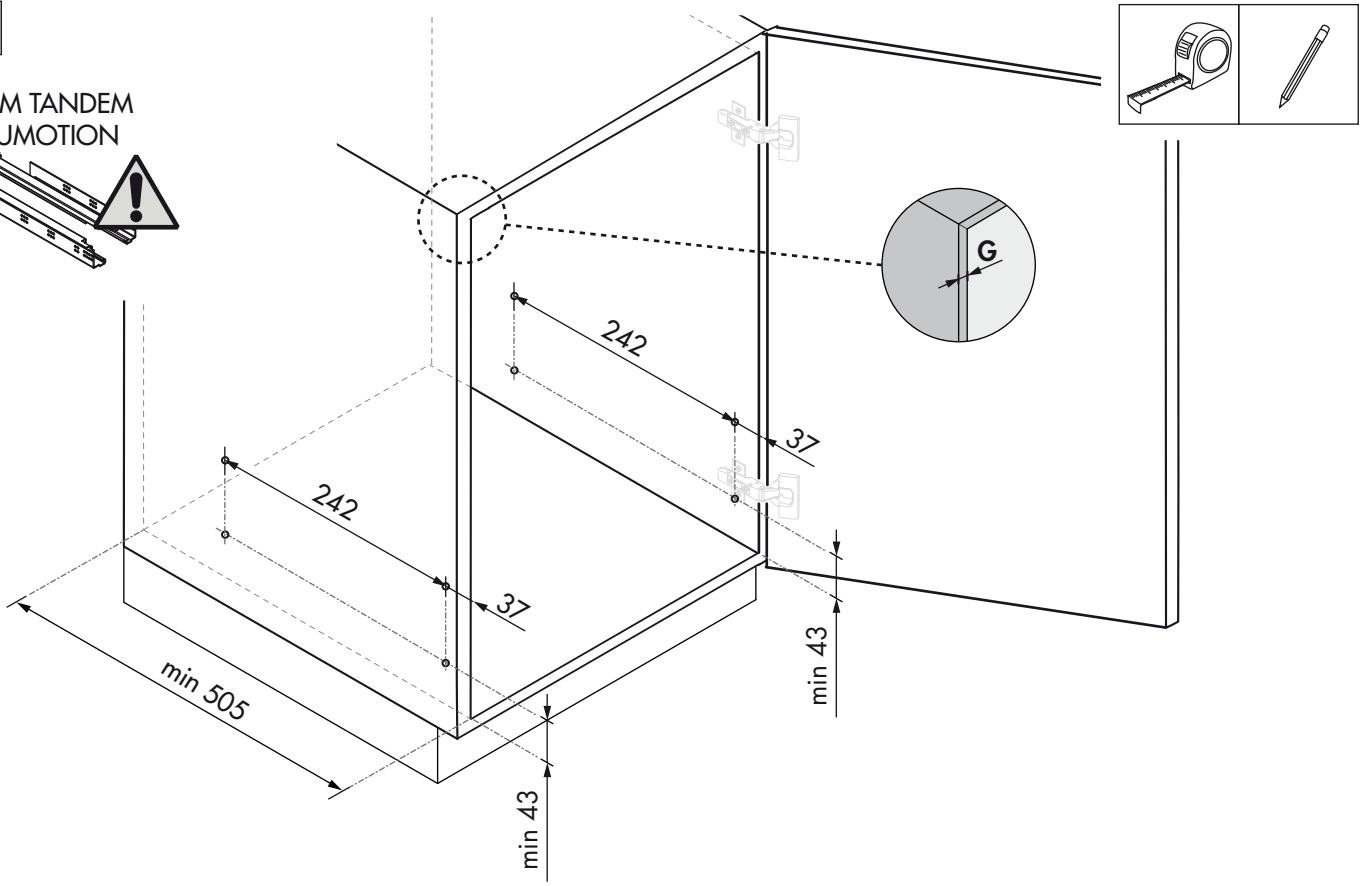

2

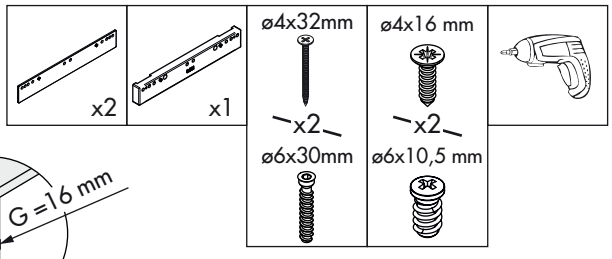

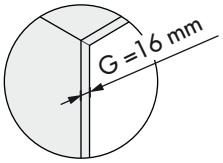

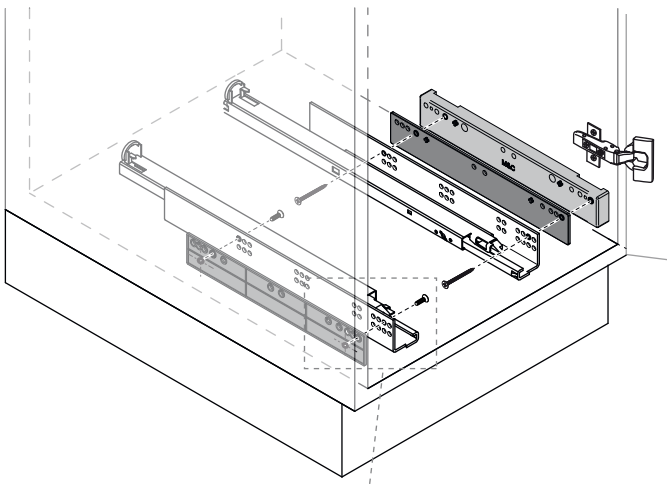

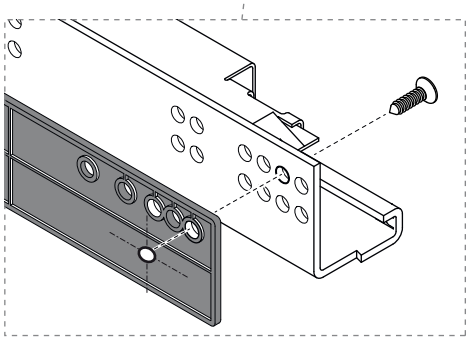

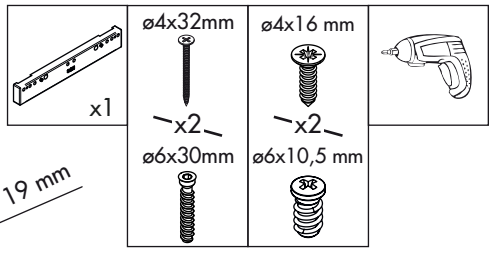

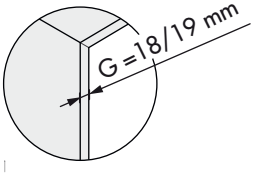

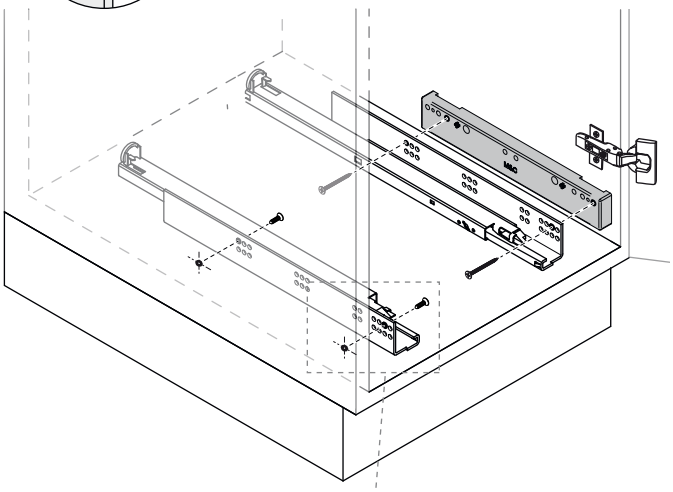

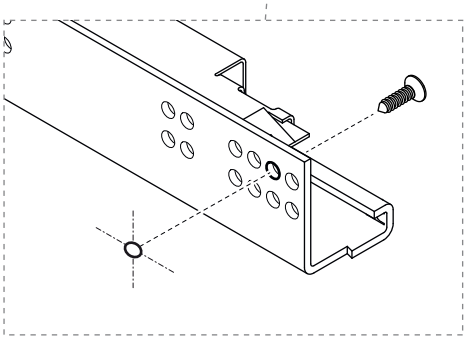

3

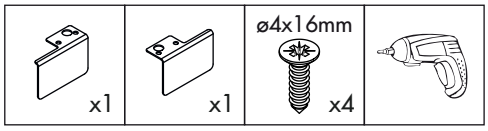

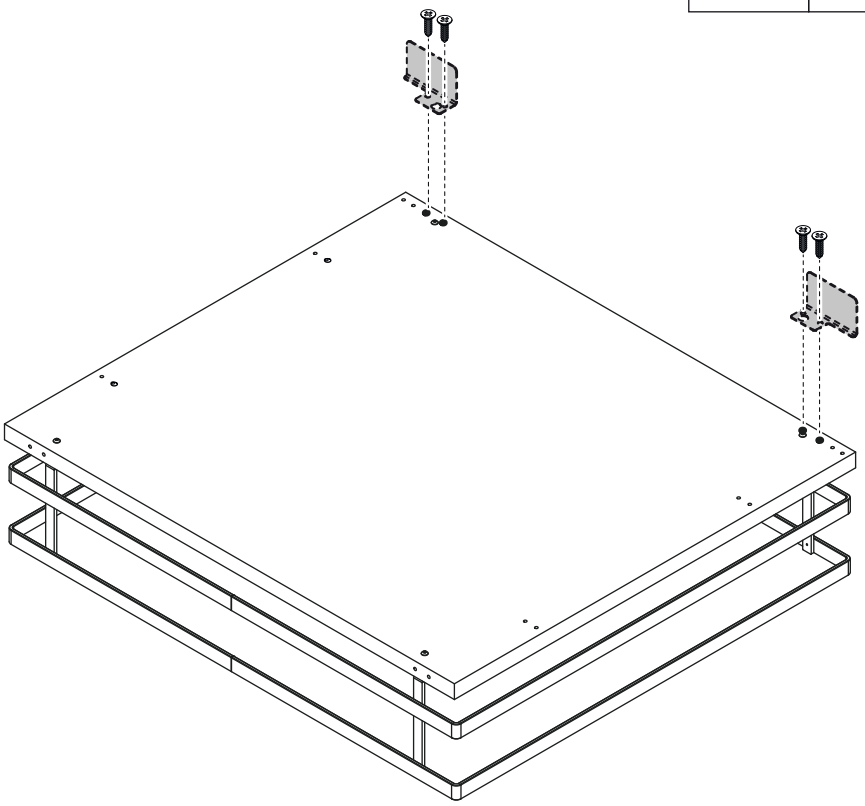

4

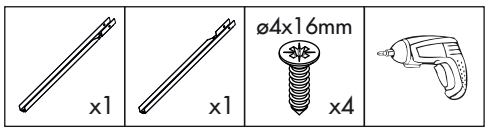

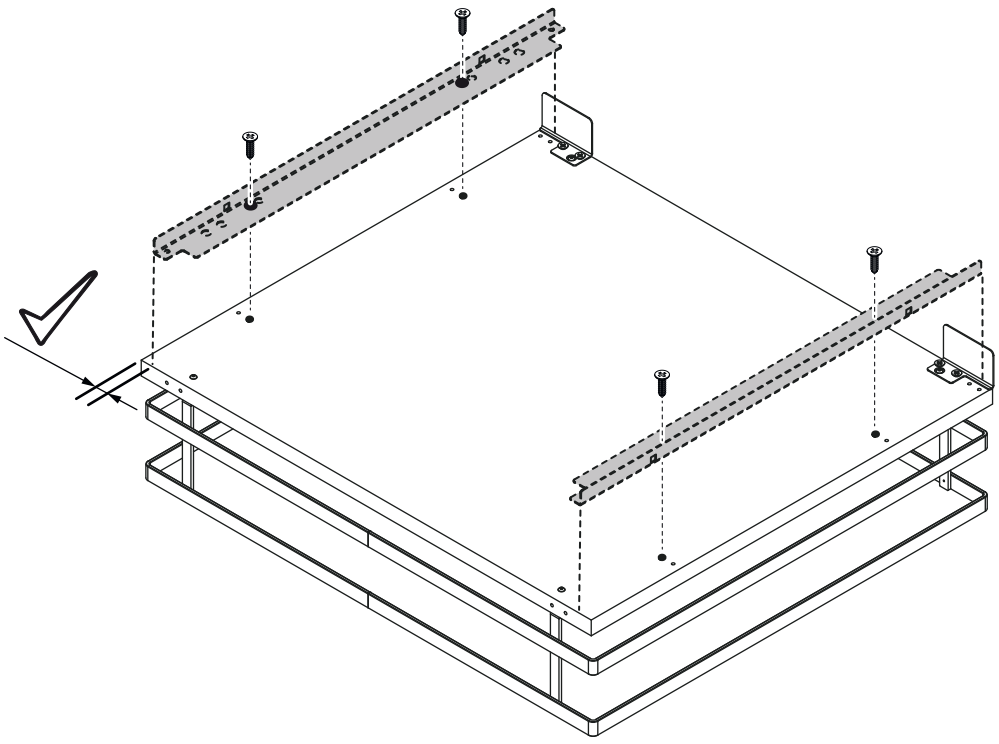

5

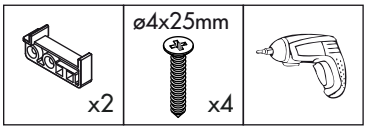

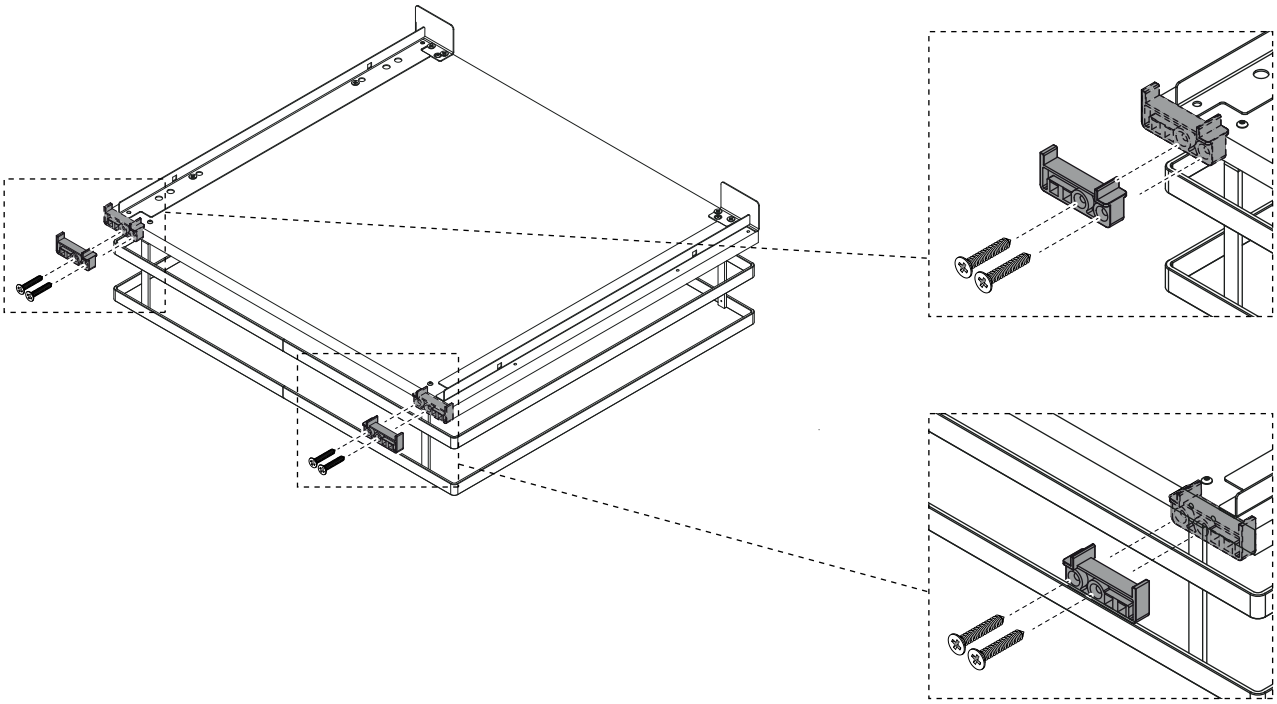

6

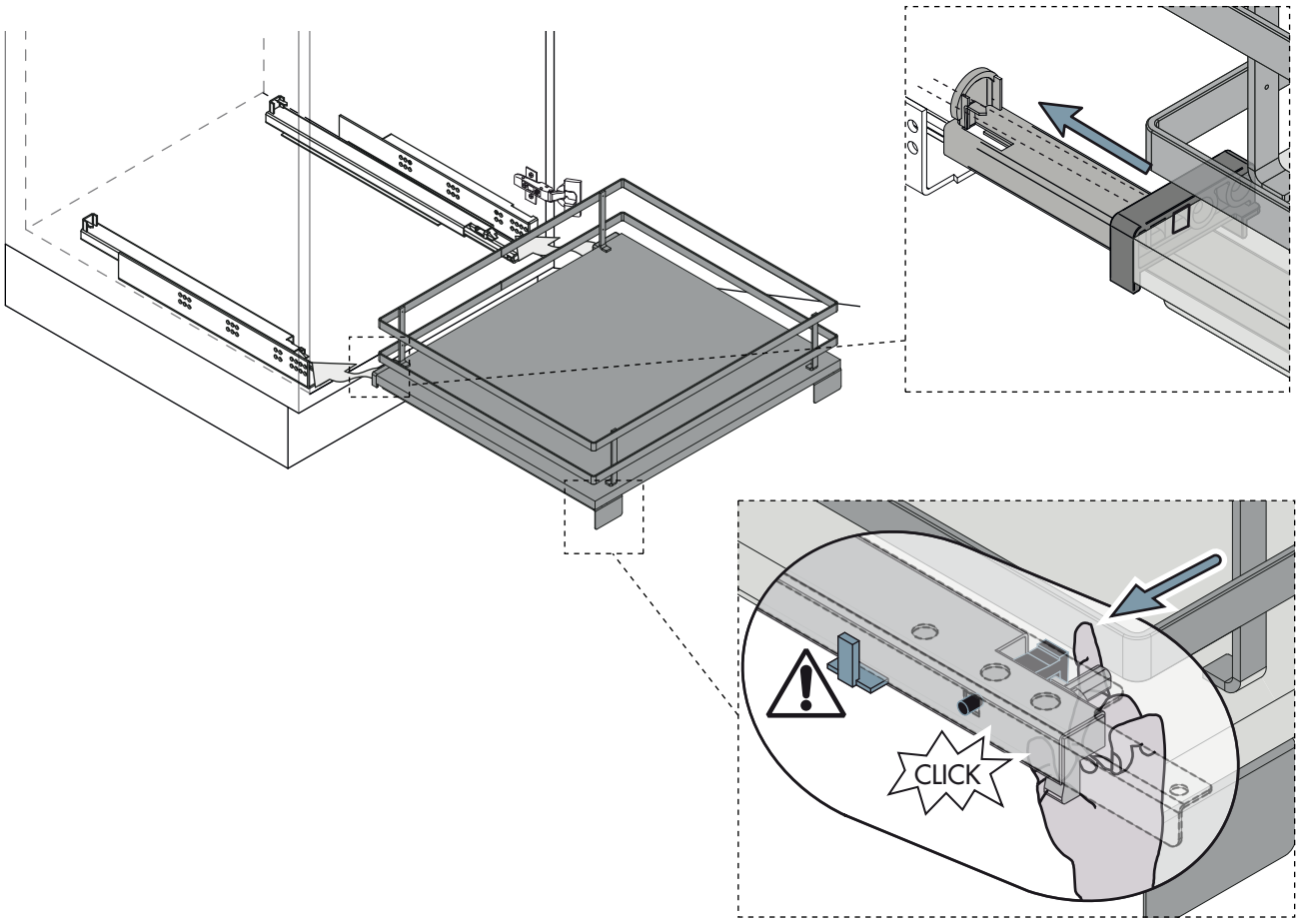

1

GRASS
NOVA PRO

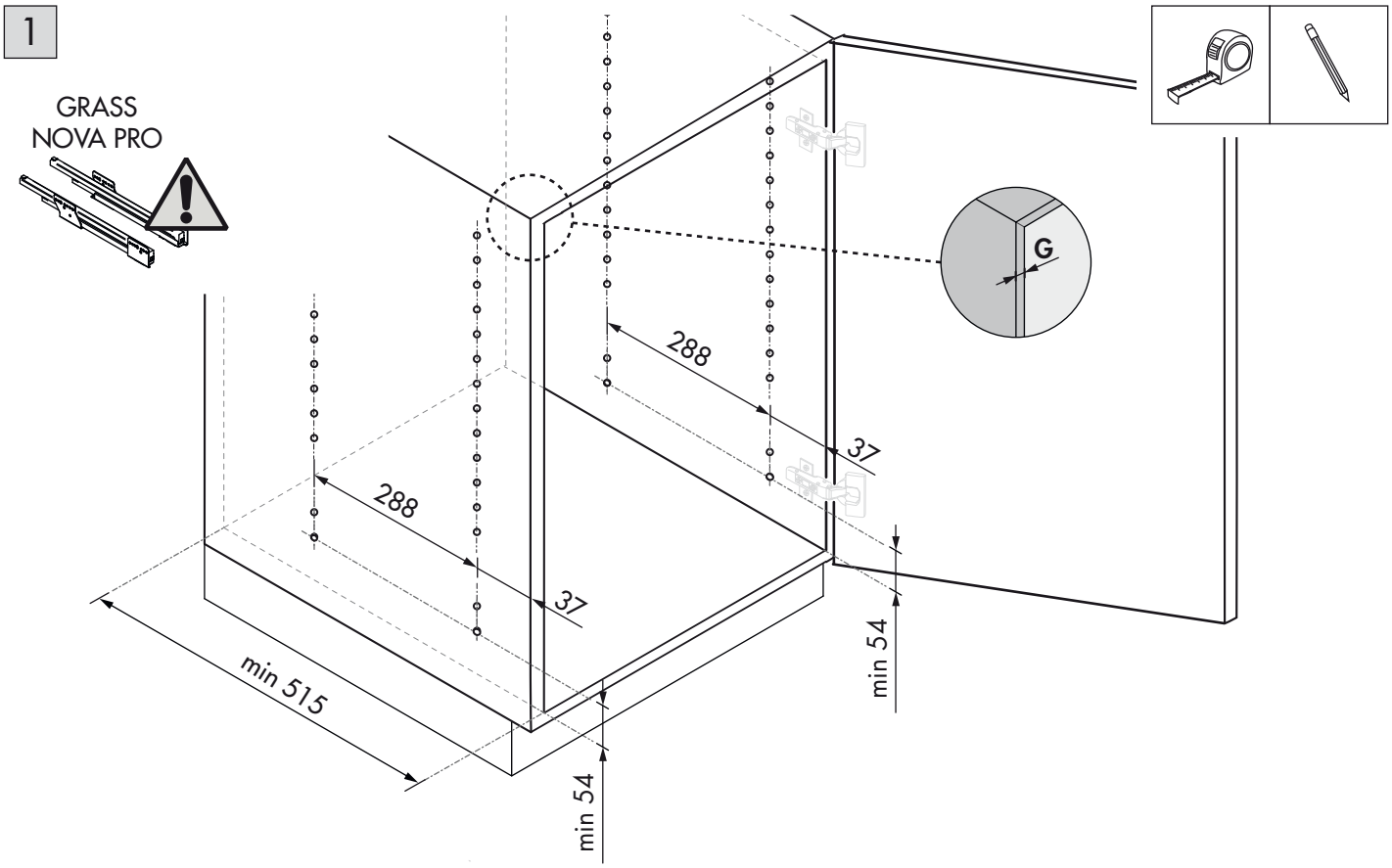

2

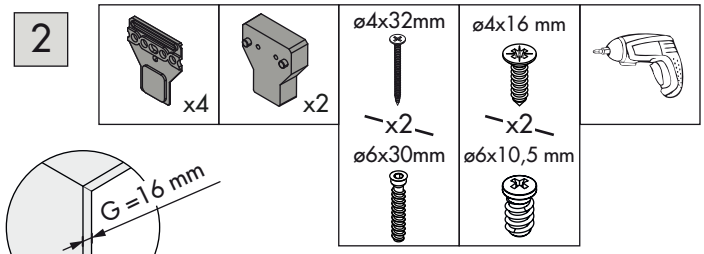

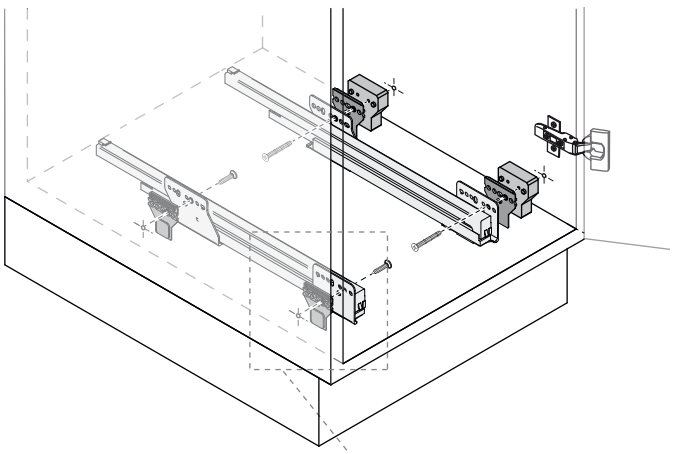

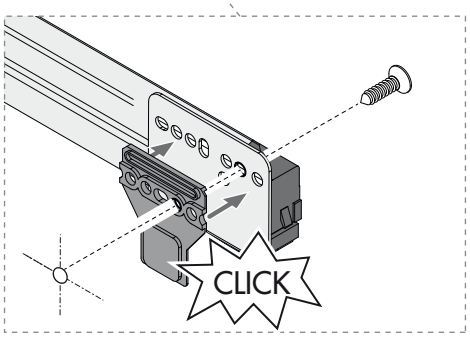

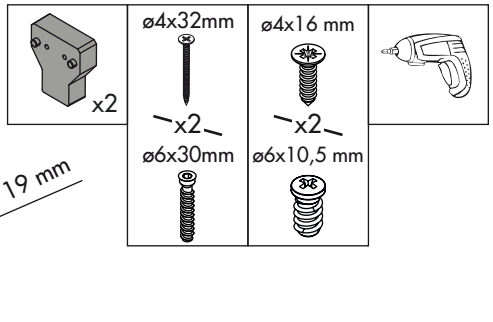

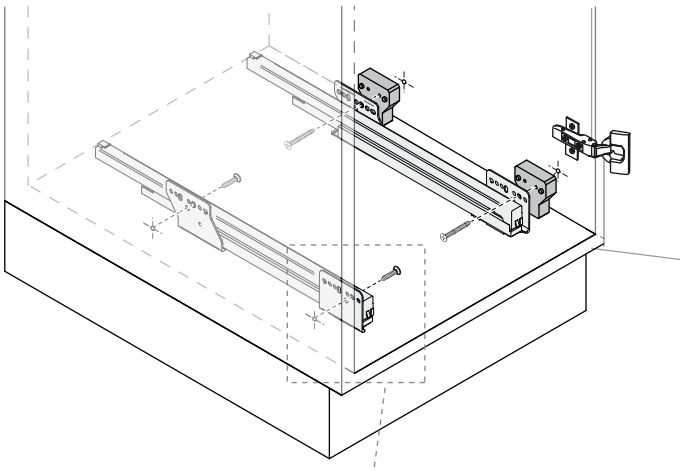

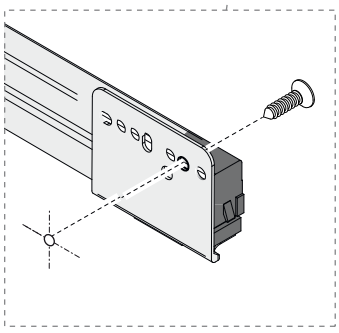

3

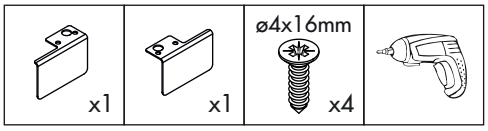

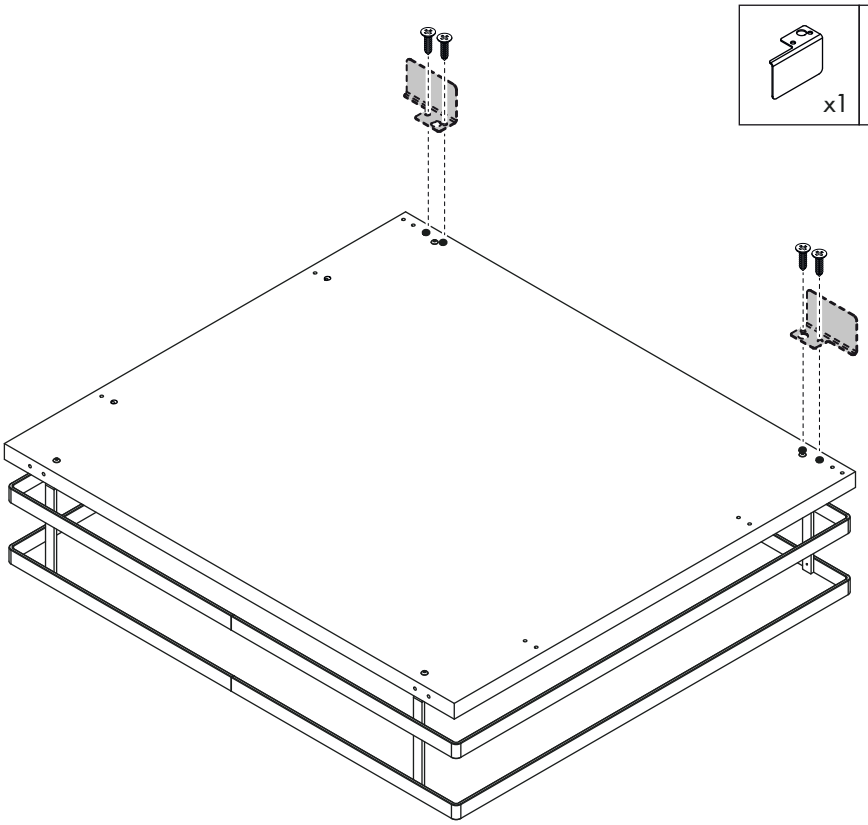

4

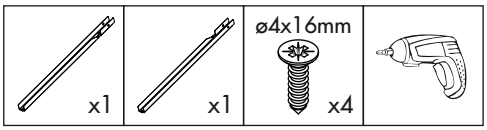

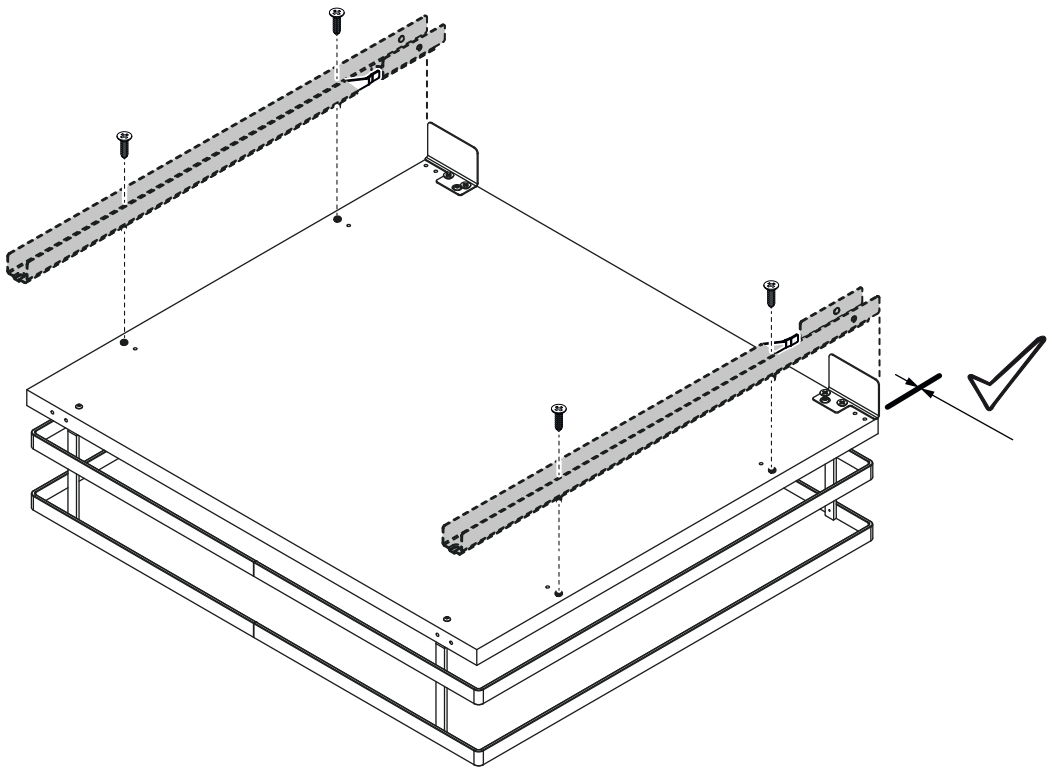

5

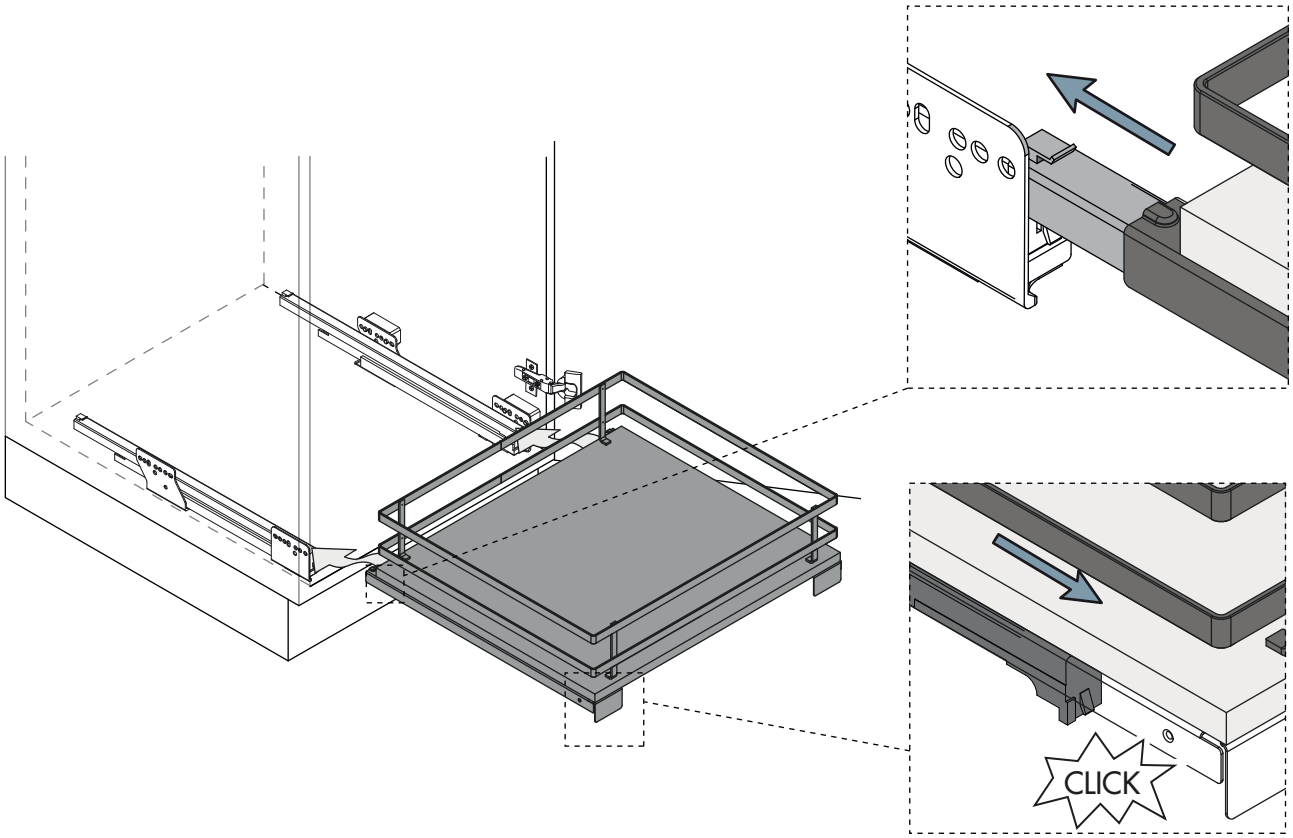

i

