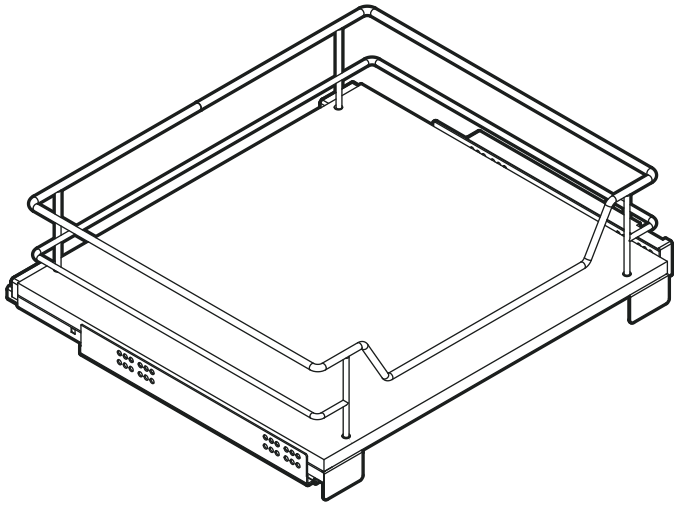

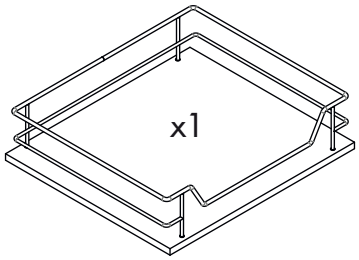
x1

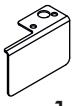
x1


x1

ø4x16mm


x4

HETTICH QUADRO V6

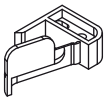
x1

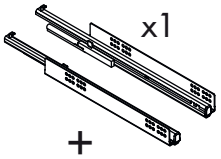
x1

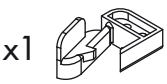
x1

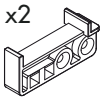
x2

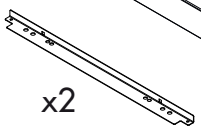
x2

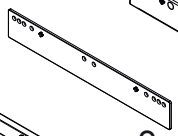
x2

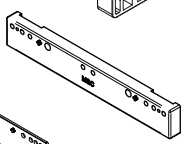
x1

ø4x16mm


x4

ø4x25mm


x4

ø4x20mm


x4

BLUM TANDEM BLUMOTION

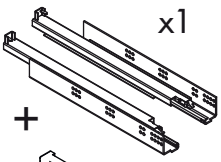
x1

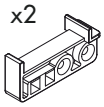
x2

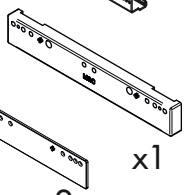
x1

x2

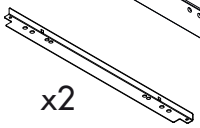
x2

ø4x16mm


x4

ø4x25mm


x4

GRASS NOVA PRO

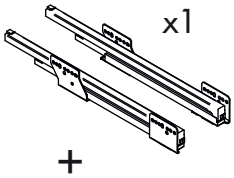
x1

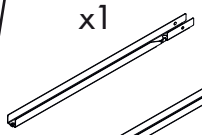
x1

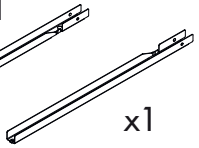
x1

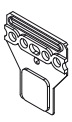
x4

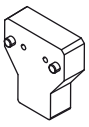
x2

ø4x16mm


x4

ø4x16mm


x2

ø6x10,5 mm



ø4x32mm


x2

ø6x30 mm









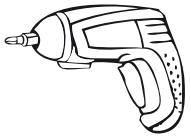

AENOR ER Empresa Registrada ER-0919/2000

CERTIFIED IQNet QUALITY SYSTEM ISO 9001

MENAGE CONFORT

www.menage-confort.com

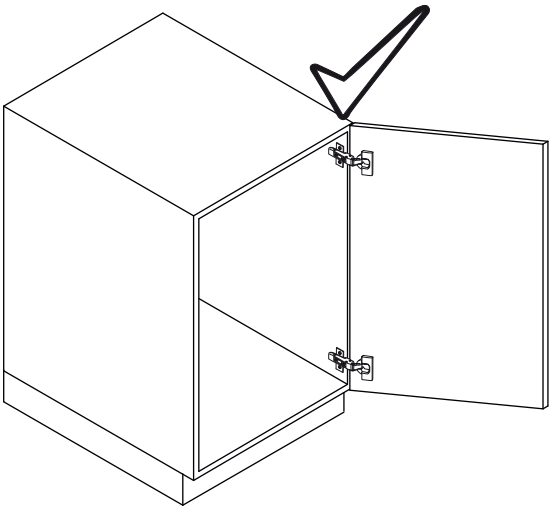

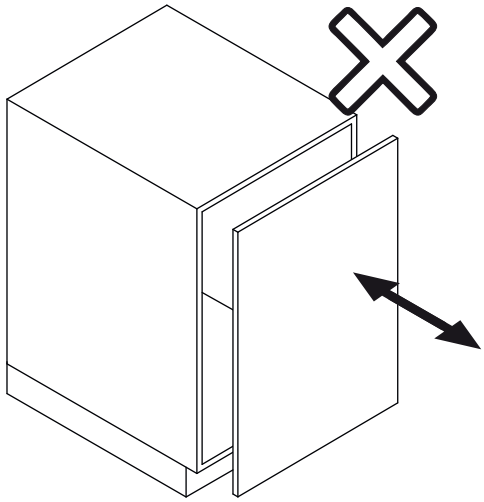

1

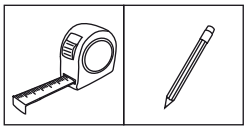

HETTICH
QUADRO V6

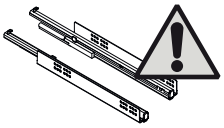

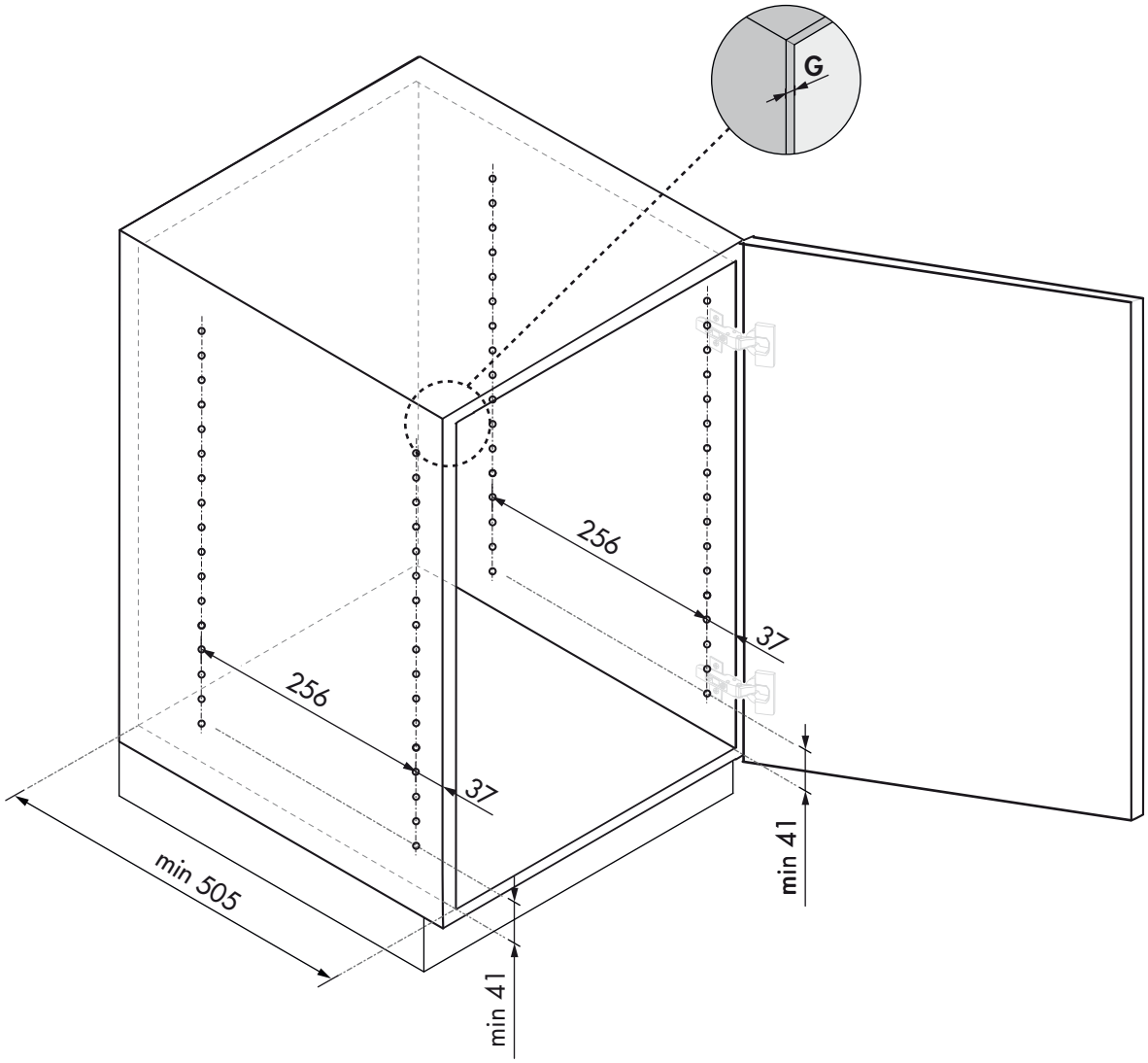

Unidades en milímetros | Units in millimeters | Unités en millimètres

2

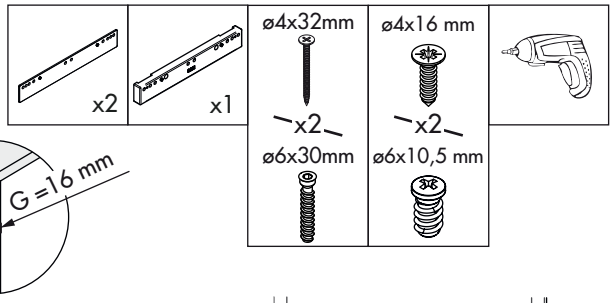
x2
x1
ø4x32mm
x2
ø6x30mm
ø4x16 mm
x2
ø6x10,5 mm

G =16 mm

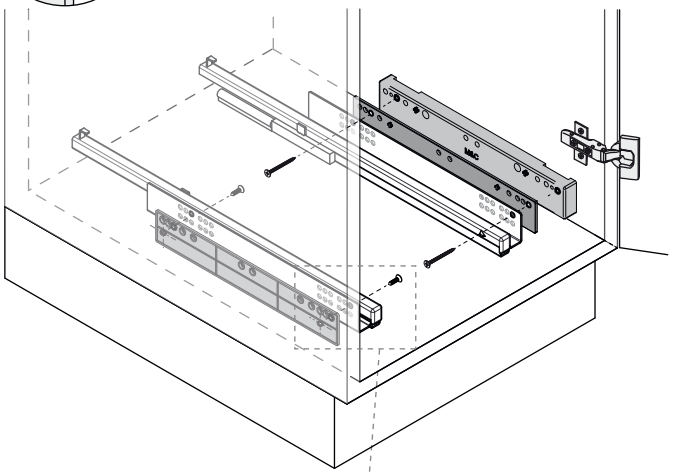

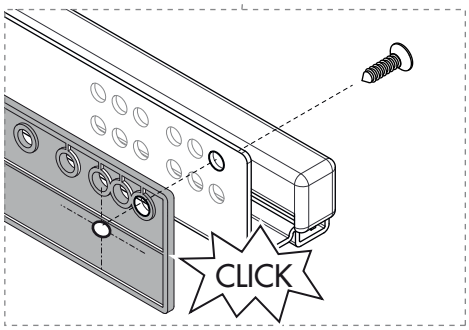
CLICK

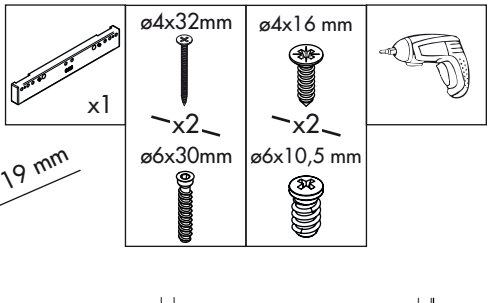
x1
ø4x32mm
x2
ø6x30mm
ø4x16 mm
x2
ø6x10,5 mm

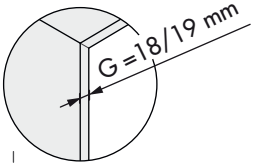
G =18/19 mm

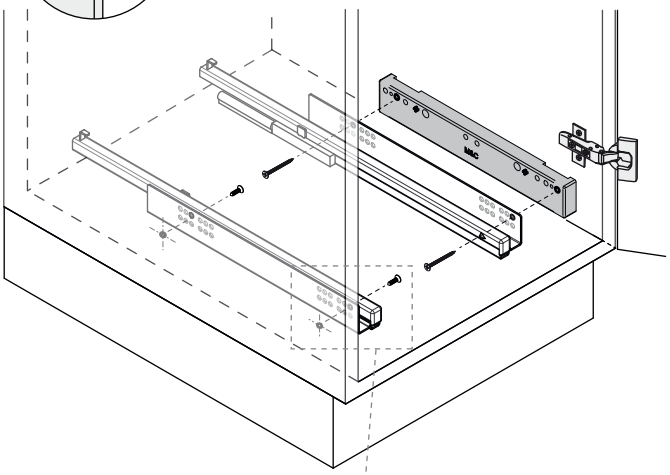

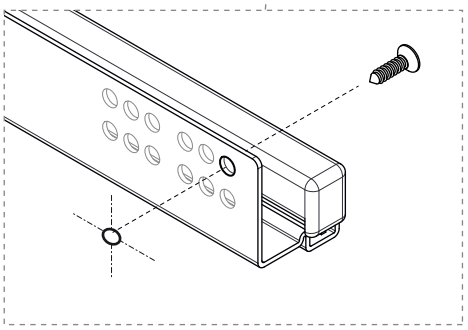

3

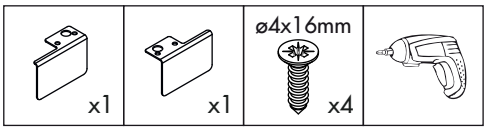
x1
x1
ø4x16mm
x4

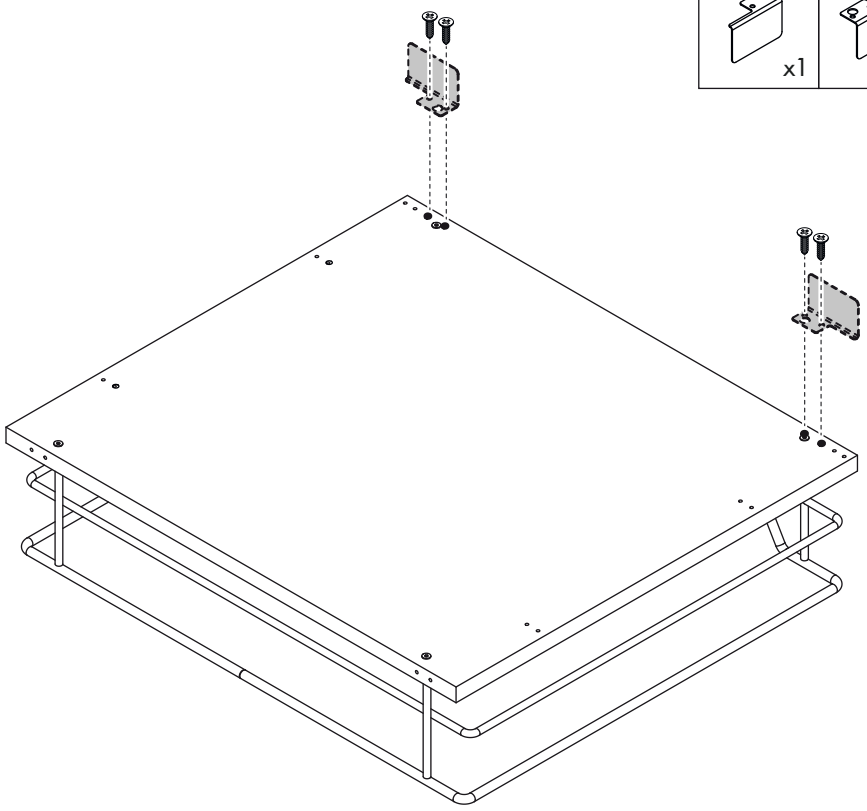

4

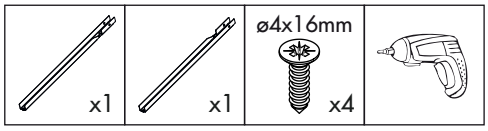

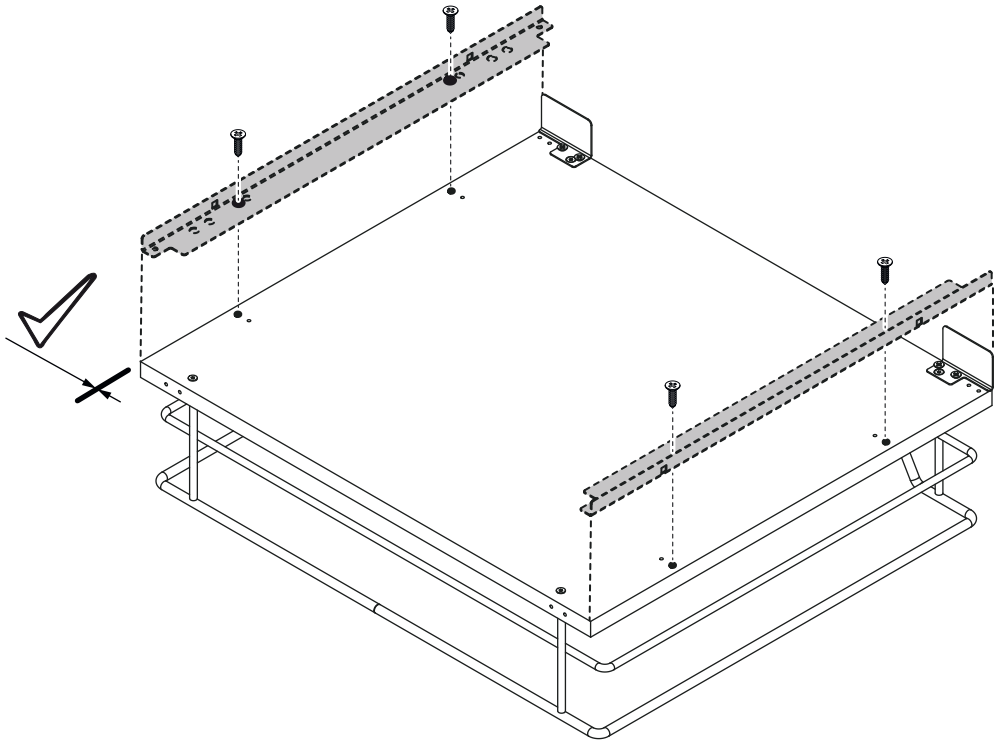

5

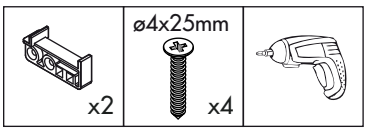

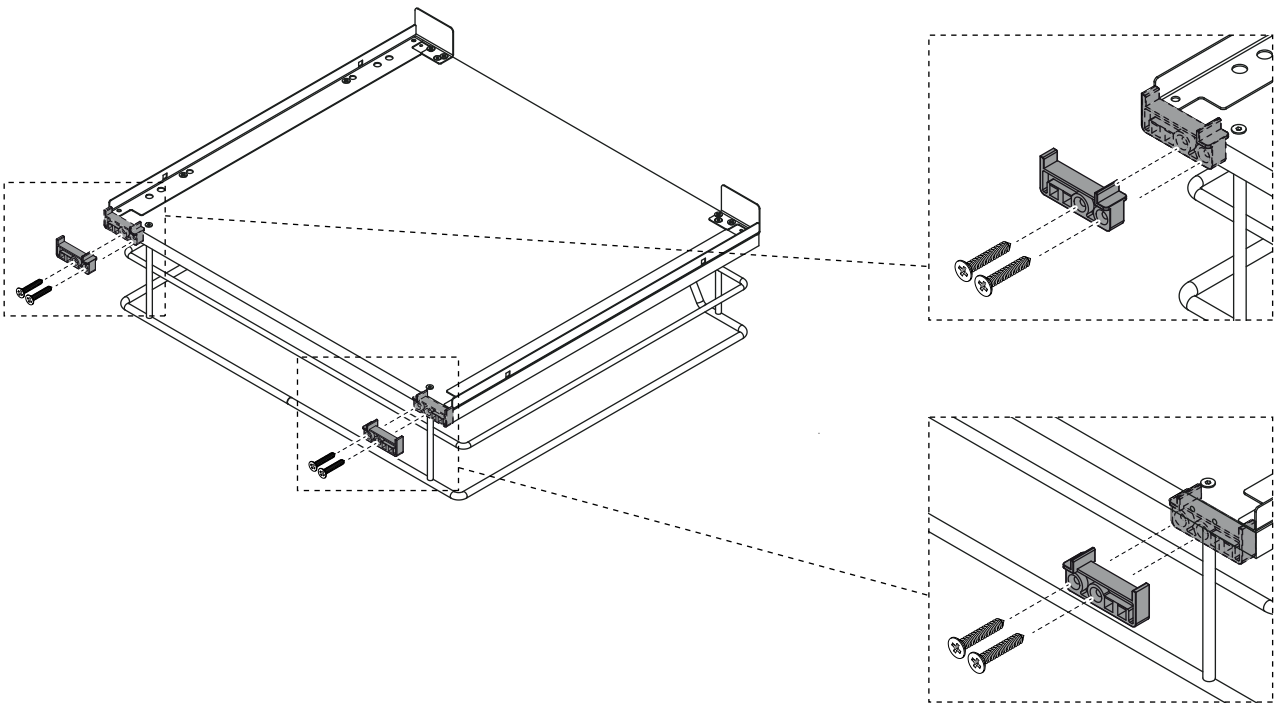

6

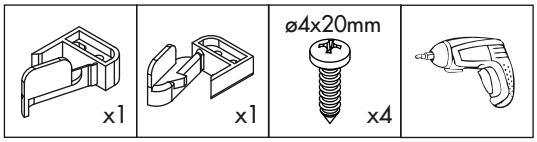

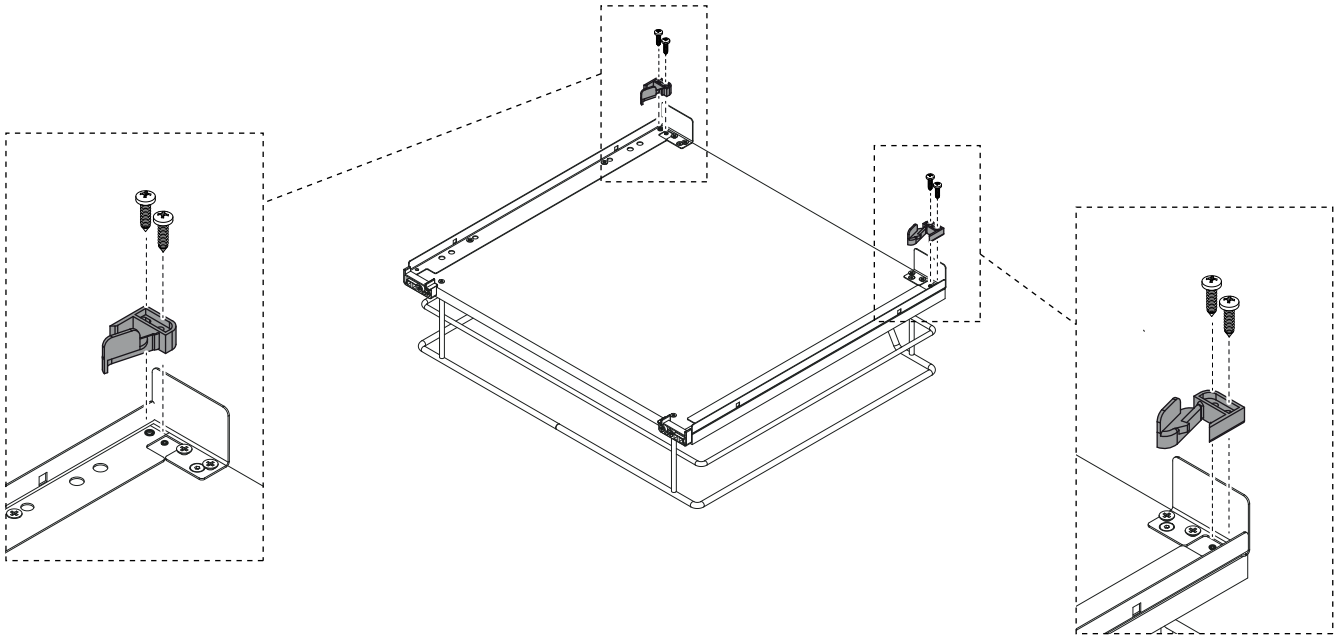

7

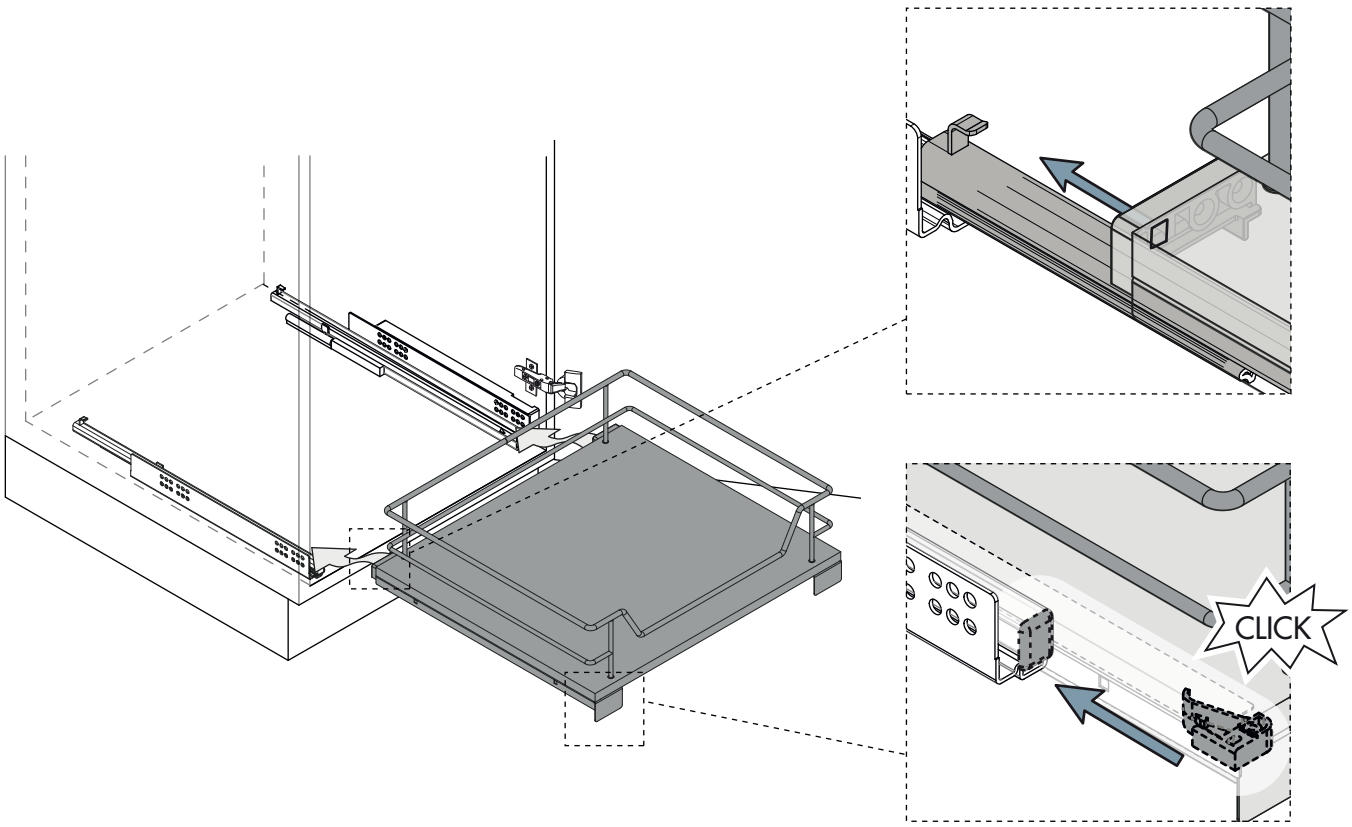

1

BLUM TANDEM
BLUMOTION

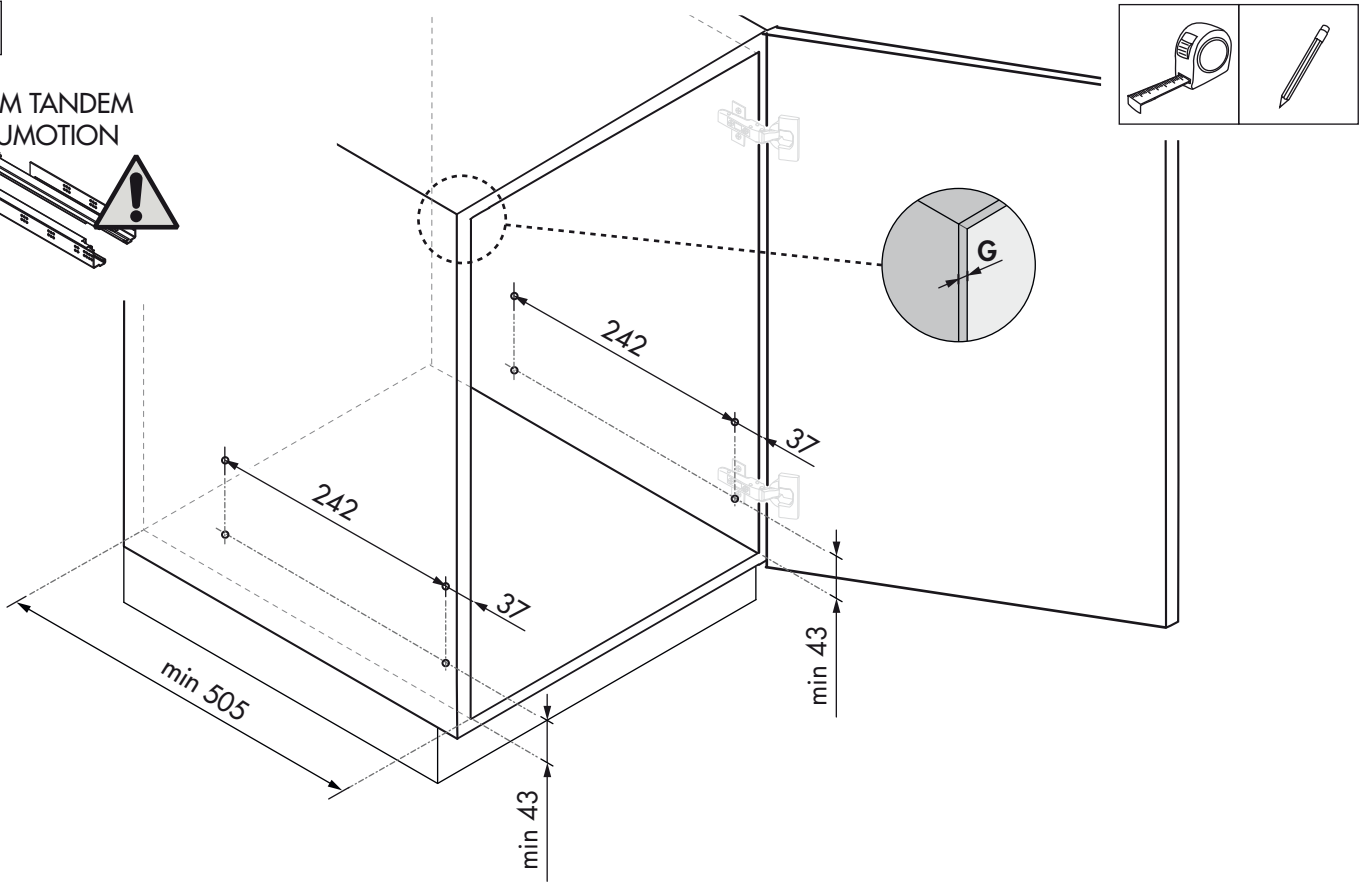

2

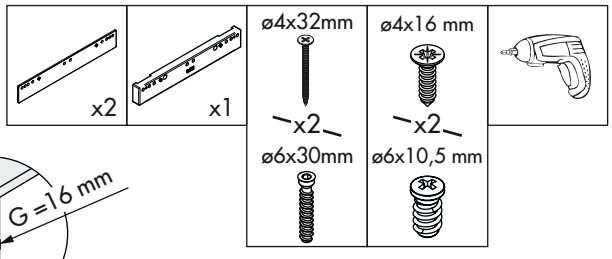

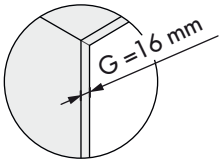

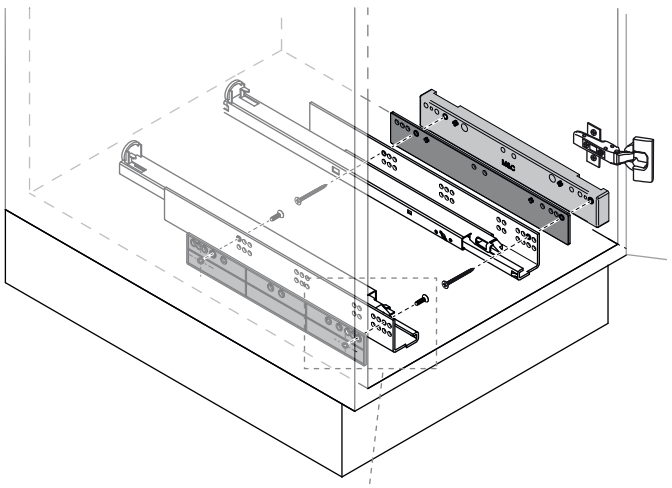

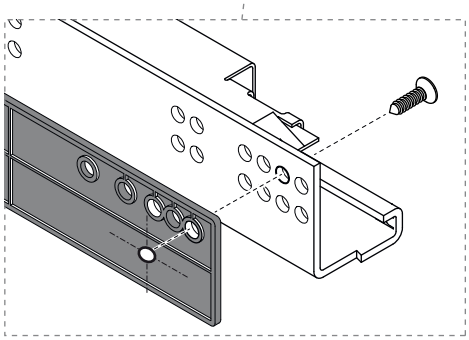

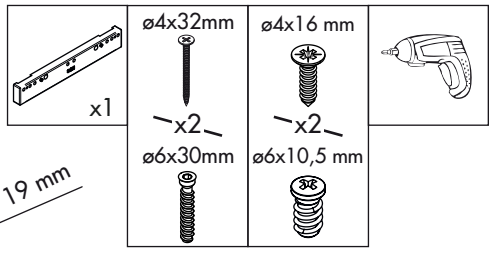

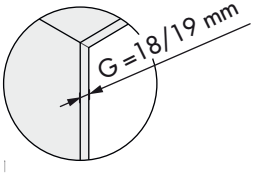

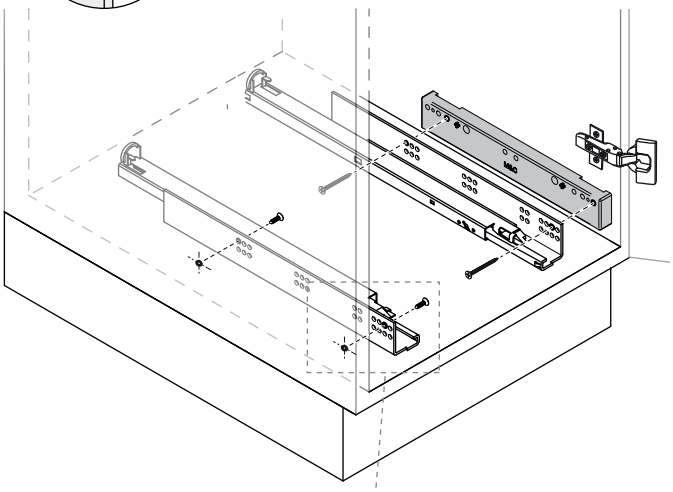

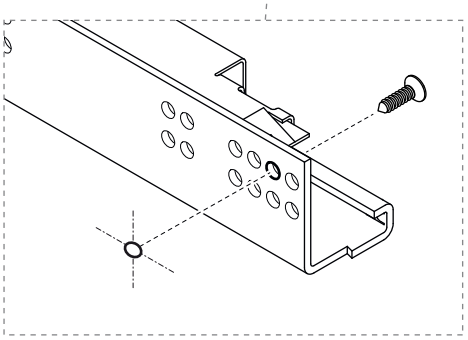

3

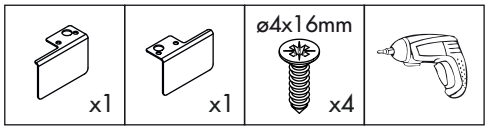

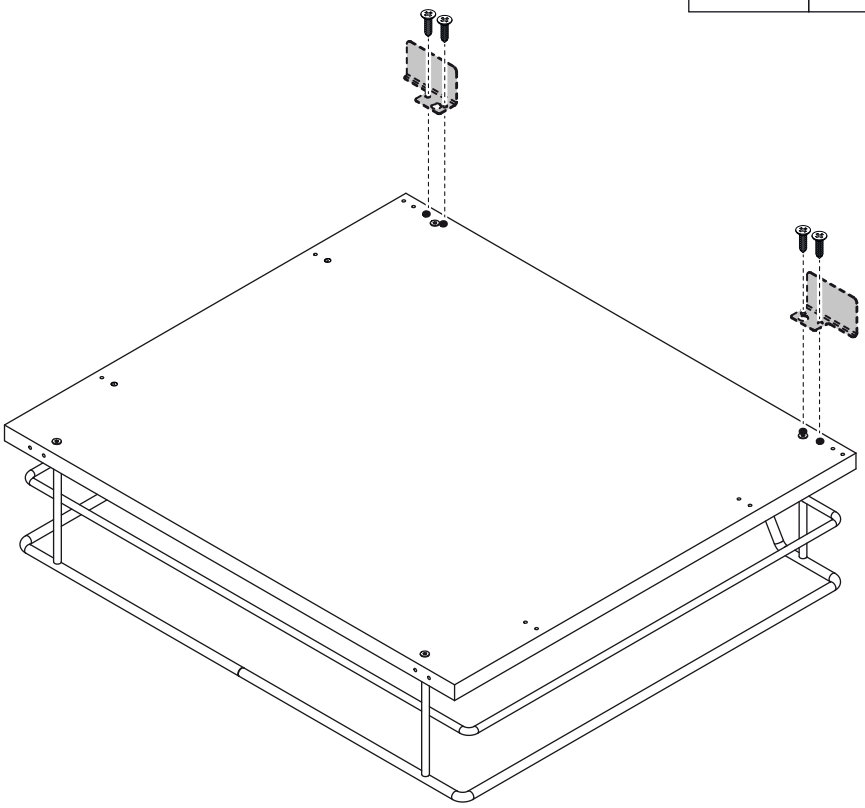

4

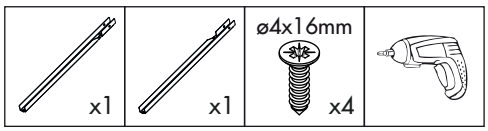

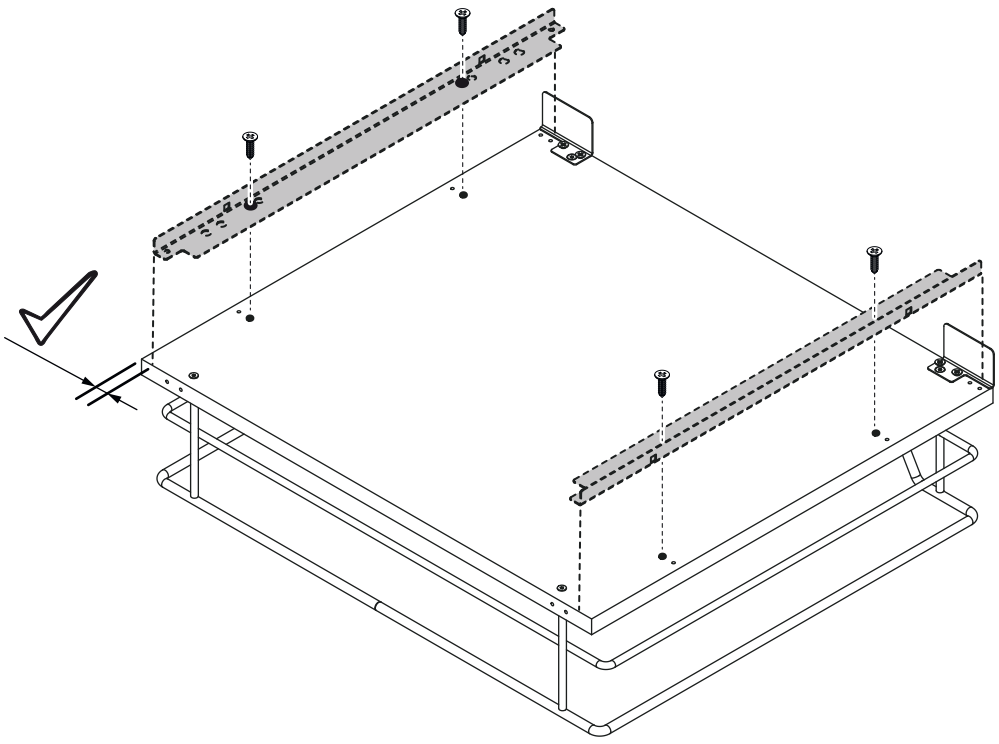

5

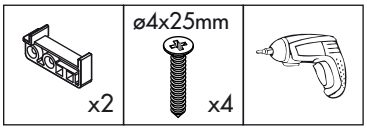

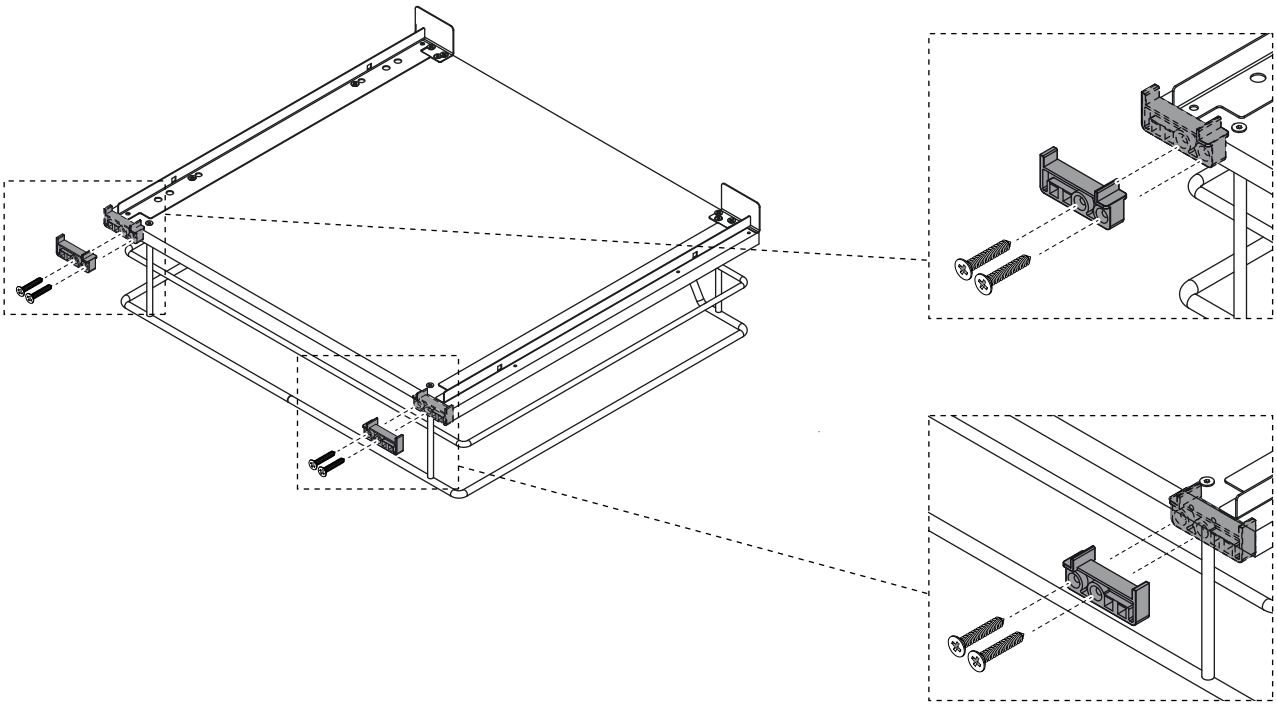

6

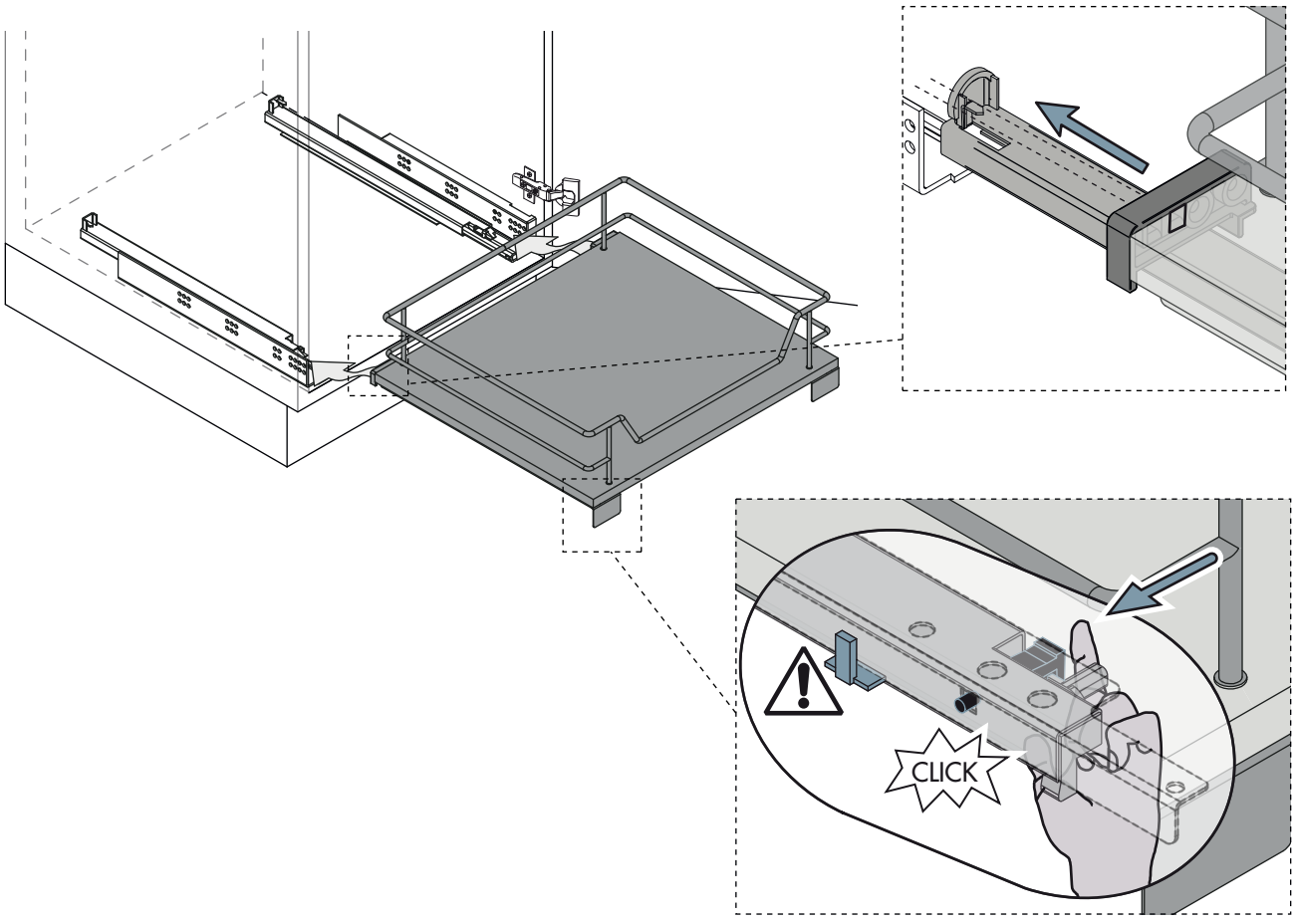

1

GRASS
NOVA PRO

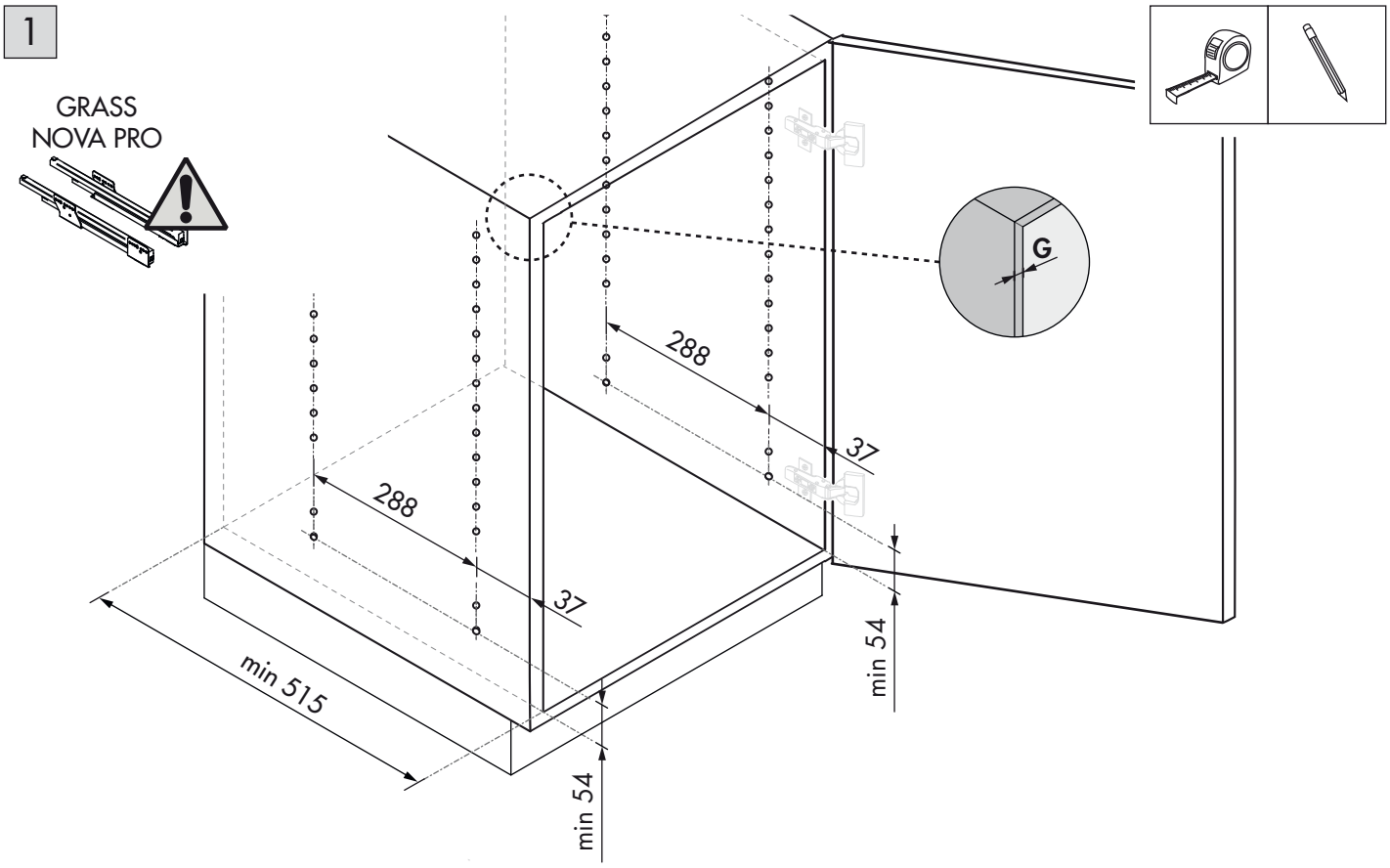

2

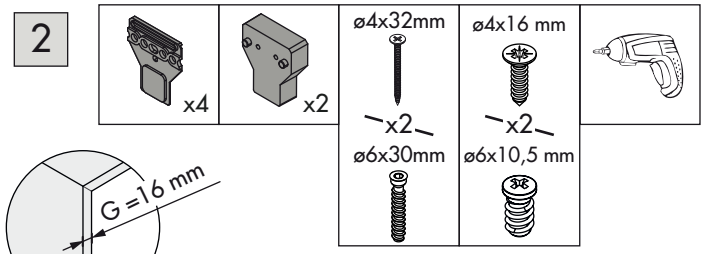

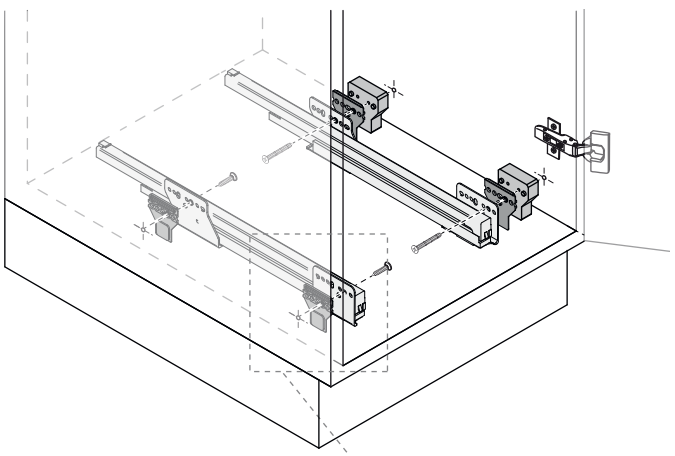

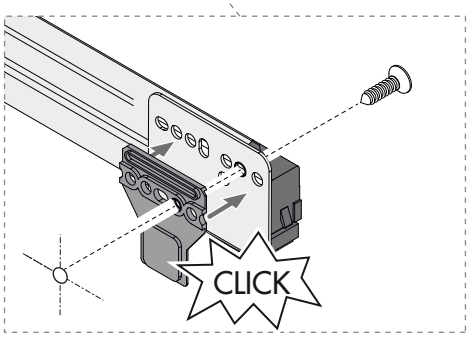

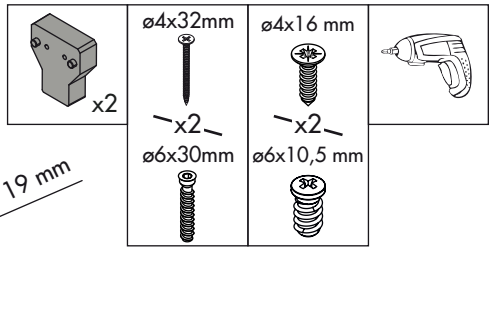

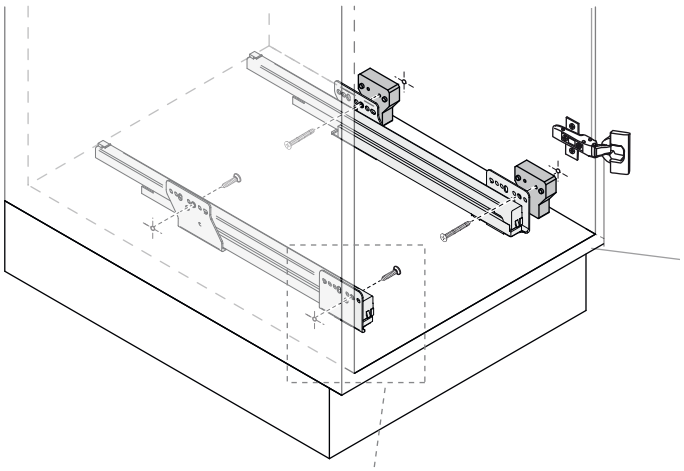

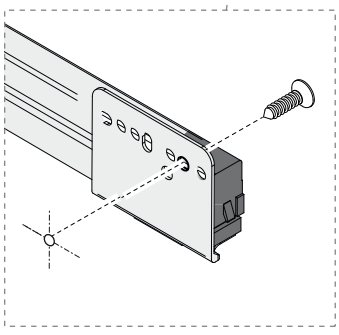

3

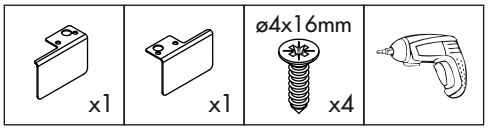

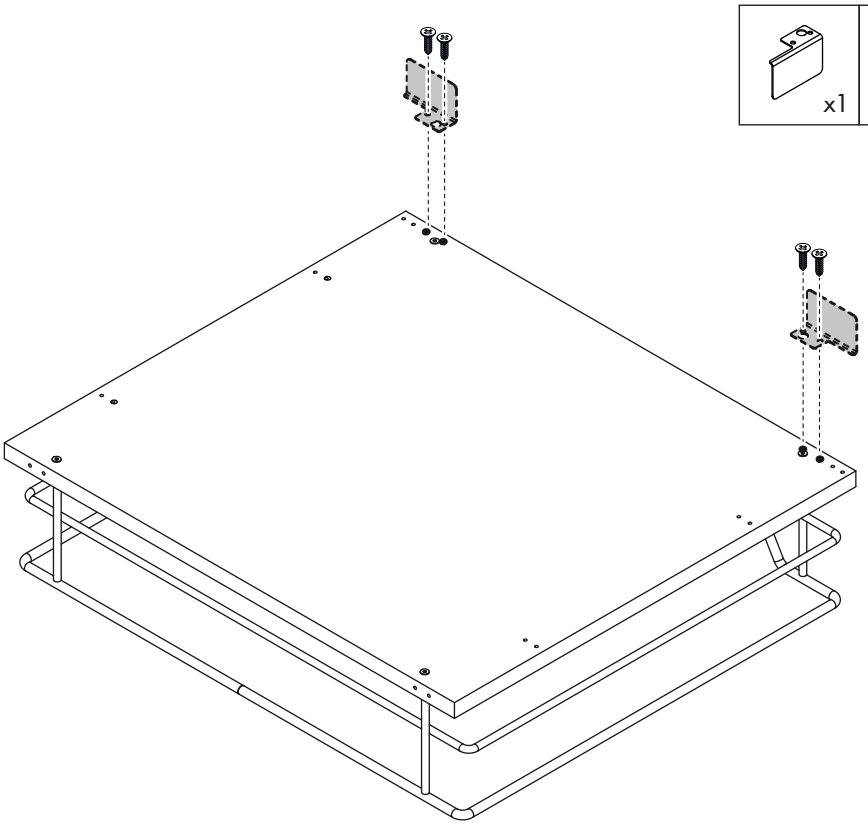

4

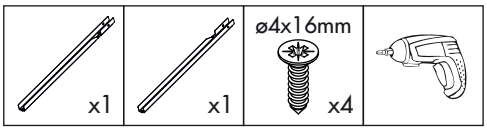

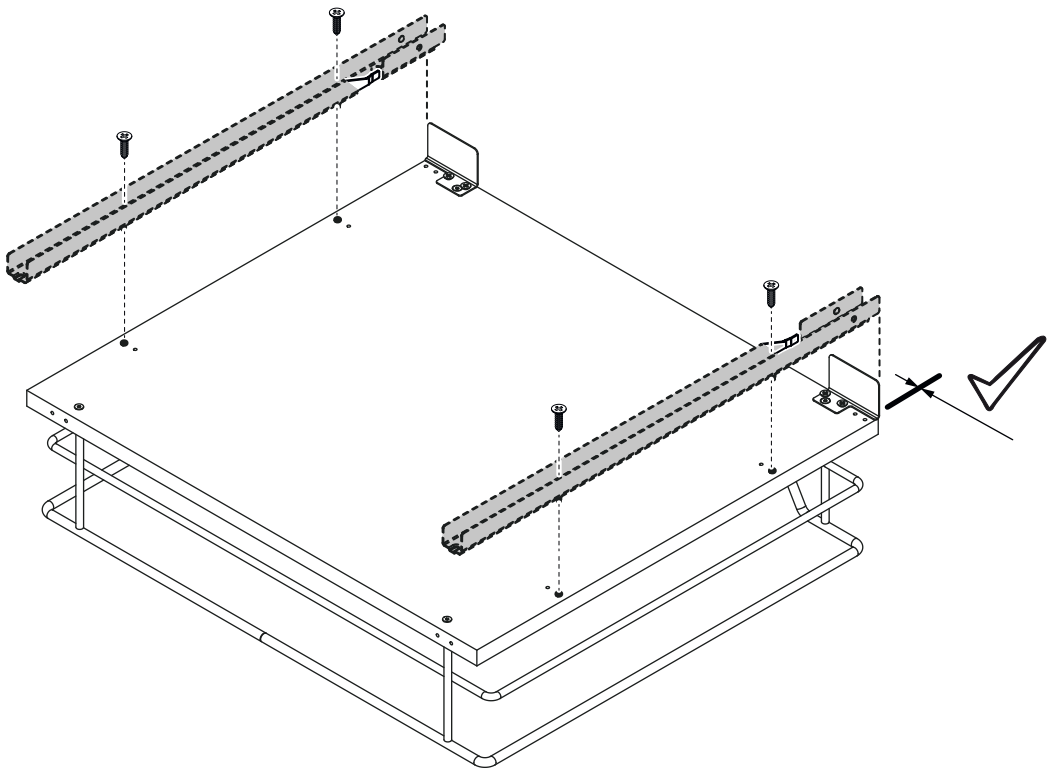

5

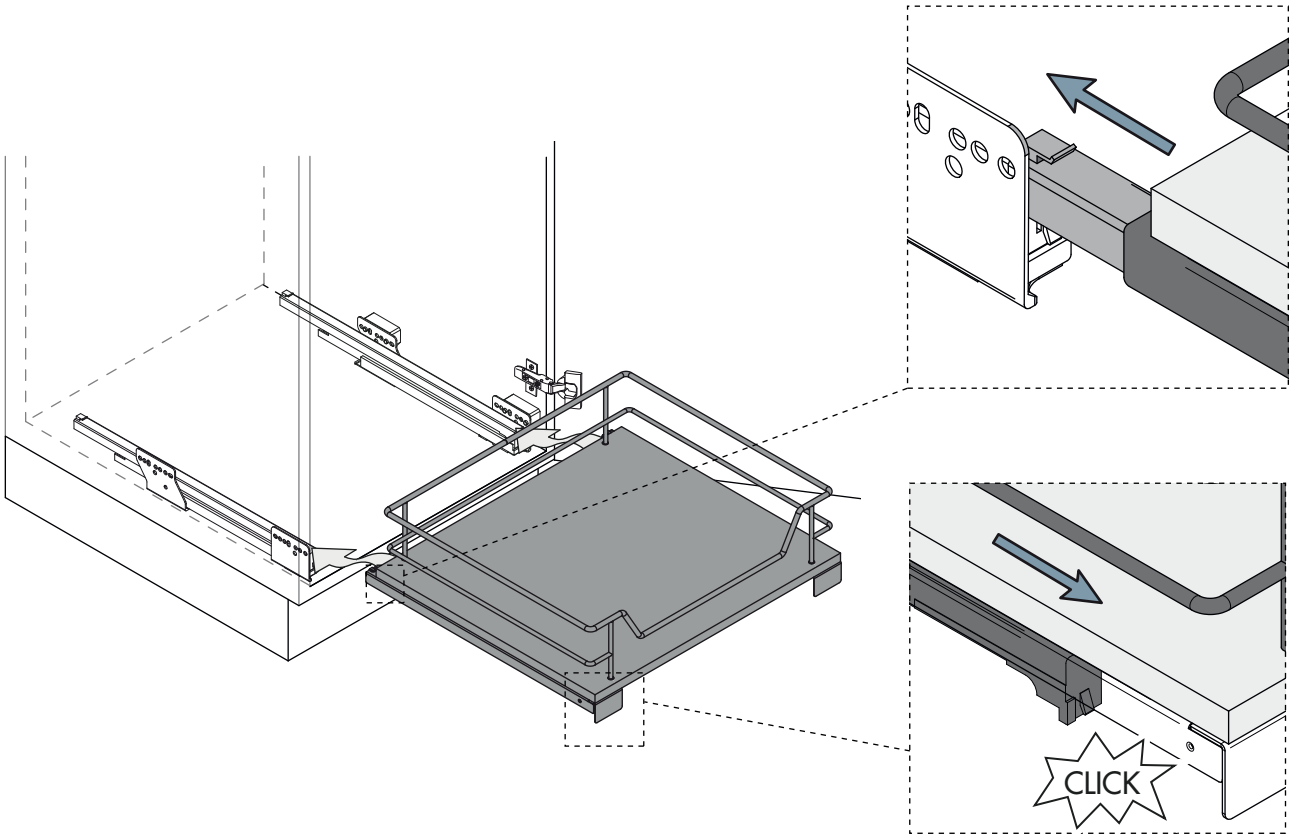

i

